TAYLOR WIMPEY (WEST MIDLANDS) LTD & SEVERN ACADAMIES EDUCATIONAL TRUST

WINDERMERE GRANGE, STOURPORT

ARBORICULTURAL METHOD STATEMENT TO BS 5837:2012

our ref:	2079 / EH / AMS001A
date:	7th January 2021
prepared by:	E.C.H
checked by:	T.G-W

address: 132A The Westlands, Compton Road, Wolverhampton, WV3 9QB
tel: 01902 424 950 / 01902 425 001 **email:** info@bealandscape.co.uk
web: www.bealandscape.co.uk

Rev:	Date:	Description:	By:

arboricultural method statement

landscape design ltd

our ref: 2079/EH/AMS001A **project:** Windermere Grange, Coniston Crescent, Stourport

date: 6th January 2021

1.0 Context

1.1 The works included within this arboricultural method statement are part of the residential development proposed for Taylor Wimpey (West Midlands) Ltd & Severn Academies Educational Trust as described within the Design & Access Statement.

1.2 As part of the planning application a tree survey was carried out for the area affected by the works (refer to Tree Survey 2079/EH/TR001). The tree survey includes the Tree Constraints Plan 20-79-02 which identifies the root protection areas of the surveyed trees.

1.3 This method statement refers to the protection of those trees in proximity of the works to be retained as part of the proposals T01, G02, T03, G04, G06, G07, T09, T21, T22, T23, T24, T25, T26, T27, T28, T29, T30, T31, T32, T33, T34, T35, T36, T37, T38, T39, G40, G41, T42, T43 and G44 during the construction phase of the project as identified on the Tree Removal & Retention Plan 20-79-06.

2.0 Tree Protection Informative:

2.1 Trees that are in good health have grown and adapted to their surroundings. Any building works or construction activity which affects their surrounding could affect their vigour, future growth and safety.

2.2 The tree root system is the most susceptible to damage and can affect the health, growth, life expectancy and safety of the tree. Damage to the trunk and branches of a tree is not usually sufficient to kill the tree, but it can affect the shape and growth potentially making a tree unsafe.

2.3 Tree roots are typically concentrated within the uppermost 600mm of the existing ground level and form a network of small diameter woody roots (typically less than 1cm or pencil thickness) with mass of finer roots. These tree roots can extend for a distance much greater than the height and spread of the tree, except where prevented by unfavourable surroundings or obstructions. These fine roots are essential for the continued health and vitality of the tree and are dependent on the existing soil conditions being maintained.

2.4 All parts of the root system, but especially the fine roots, are vulnerable to damage from uncontrolled activities. It is also known that mature trees recover slowly, if at all, from damage to their roots, whilst younger trees with good vitality do have a chance to adapt.

address: 132A The Westlands, Compton Road, Wolverhampton, WV3 9QB
tel: 01902 424 950 / 01902 425 001 **email:** info@bealandscape.co.uk
web: www.bealandscape.co.uk

3.0 Construction Proposals

3.1 The proposed development includes for the demolition of the existing building and the construction of up to 110 dwellings with associated garages, drives, fencing, access roads and soft landscape proposals on the site of the former secondary school.

4.0 Tree Protection & Ground Protection

4.1 All trees that are being retained on site are to be protected by barriers and/or ground protection prior to any site activity and before any materials or machinery are brought onto the site, before any demolition, development or stripping of soil commences.

4.2 Where all activity can be excluded from the RPA, vertical barriers are to be erected to create a construction exclusion zone. The default barrier specification is to be in accordance with Figure 2. of BS 5837:2012 'Trees in Relation to Design, Demolition and Construction - Recommendations' as illustrated below and identified within the Tree Protection Plans 20-79-07 & 20-79-08.

4.3 The protected area is to be regarded as sacrosanct, and, once installed, barriers and ground protection is not to be removed or altered without prior recommendation by the project arboriculturalist and, where necessary, approval from the local planning authority.

4.4 All weather tree protection posters as detailed below are to be securely fixed to the tree protection fencing at 10 metre centres in plain view.

4.5 The tree protection fencing to the retained trees T01, G02, T03, G04, G06, G07, T09, T21, T22, T23, T24, T25, T26, T27, T28, T29, T30, T31, T32, T33, T34, T35, T36, T37, T38, T39, G40, G41, T42, T43 and G44 is to be erected as detailed above and on the Tree Protection plans 20-79-07 & 20-79-08 and maintained in place until the completion of the project. In order to protect the boundary trees during the proposed works two phases of tree protection fencing are to be installed.

Phase 1 Tree Protection Fencing

4.6 The initial Phase 1 fence position and ground protection as identified on Tree Protection Plan 20-79-07 will protect the retained trees during the initial site clearance, demolition and main construction activities associated with the works including any required excavations.

Phase 2 Tree Protection Fencing

4.7 On completion of these works this fencing is to be relocated to the secondary Phase 02 fence line with temporary ground protection installed as illustrated on the Tree Protection Plan 20-79-08 to enable the carrying out of the hard surfacing, fencing and soft landscaping.

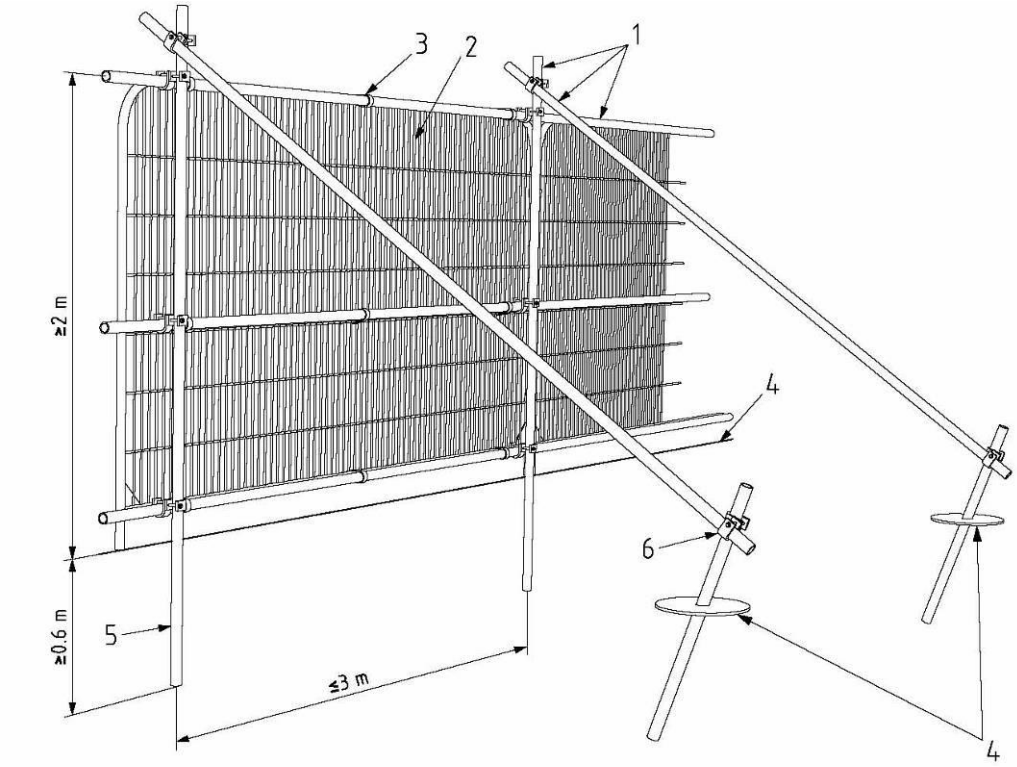

Key

1 Standard scaffold poles
2 Heavy gauge 2 m tall galvanized tube and welded mesh infill panels
3 Panels secured to uprights and cross-members with wire ties
4 Ground level
5 Uprights driven into the ground until secure (minimum depth 0.6 m)
6 Standard scaffold clamps

BS 5837 Figure 02; Default Specification for protective barrier

4.6 Care is to be exercised when locating the vertical poles to avoid underground services and, in the case of the bracing poles, also to avoid contact with structural roots. If the presence of underground services precludes the use of driven poles, an alternative specification that provides an equal level of protection is to be prepared in conjunction with the project arboriculturalist as illustrated within Figure 3 of BS 5837:2012 below.

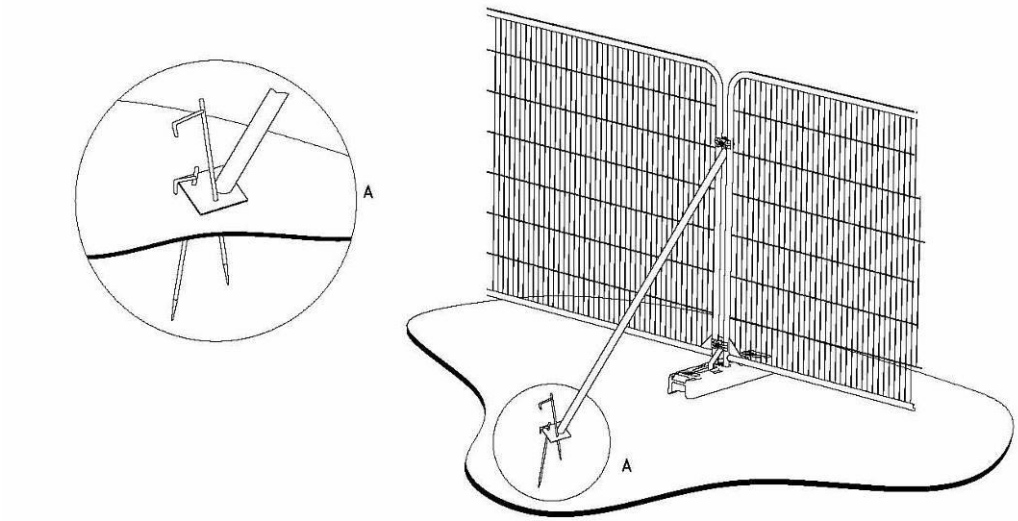

a) Stabilizer strut with base plate secured with ground pins

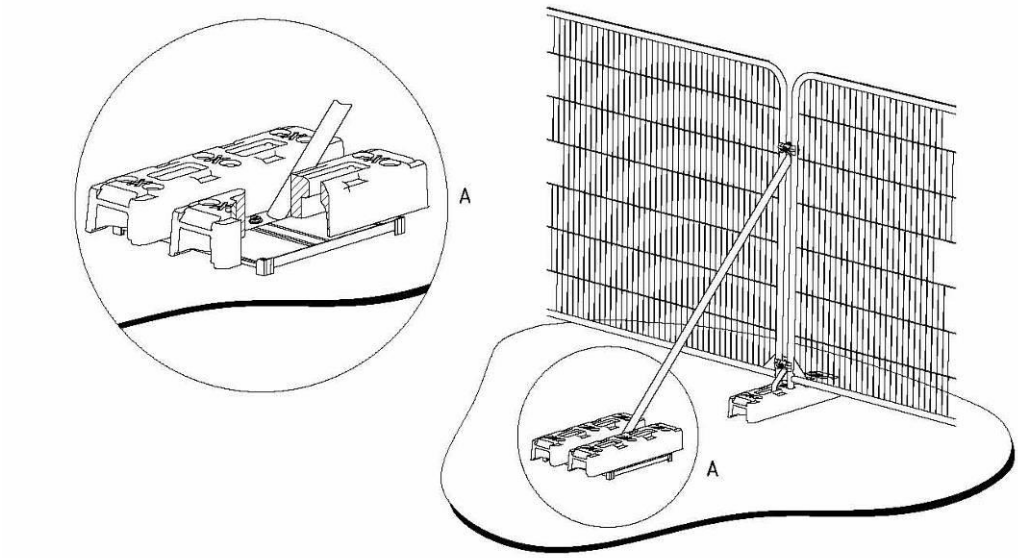

b) Stabilizer strut mounted on block tray

BS 5837 Figure 03; Examples of above-ground stabilising systems

4.7 Where the protection fencing is set back (within the RPA) to allow for construction access on previously unpaved of hardstanding areas, temporary ground protection as identified on the Tree Protection Plans 20-79-07 & 20-79-08 is to be installed as part of the implementation of physical tree protection measures prior to work starting on site.

4.8 Temporary ground protection is to be capable of supporting any traffic entering or using the site without being distorted or causing compaction of underlying soil.

a) for pedestrian movements only, a single thickness of scaffold boards placed either on top of a driven scaffold frame, so as to form a suspended walkway, or on top of a compression-resistant layer (e.g. 100 mm depth of woodchip), laid onto a geotextile membrane;

b) for pedestrian-operated plant up to a gross weight of 2t, proprietary, inter-linked ground protection boards placed on top of a compression-resistant layer (e.g. 150 mm depth of woodchip), laid onto a geotextile membrane;

c) for wheeled or tracked construction traffic exceeding 2t gross weight, an alternative system (e.g. proprietary systems or pre-cast reinforced concrete slabs) to an engineering specification designed in conjunction with arboricultural advice, to accommodate the likely loading to which it will be subjected.

5.0 Site Compound and Working Area

5.1 A small temporary site compound for demolition works is to be created to the North of the existing garage, accessed from the existing tarmac access road and located outside of the Construction Exclusion Zones of the retained trees.

5.2 The main site compound is to be located on the site of the demolished buildings and outside of the Construction Exclusion Zones and accessed from Coniston Road by the existing site access. All contractors staff car parking is to be contained within the site area with a dedicated parking area.

6.0 Haul Routes

6.1 The route for the haulage of materials and deliveries within the site is to be along the line of the proposed internal site roads, which are to be constructed to base course prior to the commencement of building construction.

6.2 The planning of site operations should take sufficient account of wide loads, tall loads and plant with booms, jibs and counterweights (including drilling rigs), in order that they can operate without coming into contact with retained trees. Any transit or traverse of plant in proximity to trees should be conducted under the supervision of a banksman, to ensure that adequate clearance from trees is maintained at all times.

7.0 Temporary Topsoil Storage

7.1 The stripped topsoils are to be stored in temporary mounds outside of the construction exclusion zones of the retained trees. In accordance with BS 4428 topsoil heaps should not exceed 3m in height.

8.0 Demolition

8.1 The development proposals require the demolition of the existing house and garage adjacent to the retained trees G04, G06, G07 & T09. Prior to the demolition works tree protection fencing is to be erected as specified above and detailed on the Tree Protection Plan 20-79-07.

8.2 All plant and vehicles engaged in demolition works are to operate outside the of the protected Construction Exclusion Zones. Where trees stand adjacent to structures to be removed, the demolition should be undertaken inwards within the footprint of the existing building (often referred to as "top down, pull back").

8.3 The project arboriculturalist is to be informed and consulted where underground structures are present within the RPA are, or will become redundant. In general it is preferable to leave such structures in situ, as their removal could damage adjacent tree roots.

9.0 Building Foundation Design:

9.1 The proposals require the construction of part of the Plot 99 at the edge of the RPA of the Southern most tree within group G04. The proposed building and associated foundations therefore require careful consideration to ensure the existing trees are be protected during construction and how they are to be constructed whilst causing minimal damage to the tree

9.2 During the installation of the foundations and construction of the building the ground within the root protection zone of G04 is to be protected from compaction in accordance with clause 6.2.3 of BS5837:2012 and as outlined above and indicated on Tree Protection Plan 20-79-08.

9.3 The building foundation is to be designed by the project engineers based on a geotechnical survey report and in accordance with the NHBC Standards and the principles contained within section 7.5 of BS5837:2012 'Special Engineering for foundations within the RPA'. This states that root damage can be minimised by using;

- Piles; with site investigation used to determine their optimal location whilst avoiding damage to roots important for the stability of the tree, by means of hand tools or compressed air soil displacement, to a minimum depth of 600 mm;

- Beams, laid at or above ground level, and cantilevered as necessary to avoid tree roots identified by site investigation.

9.4 In accordance with clause 7.5.5 piling to be installed near to trees is to be the smallest practical pile diameter, particularly where piling within the branch spread. The pile type is to be selected by the project engineer to protect the soil and adjacent roots from the potentially toxic effects of uncured concrete, e.g. sleeved bored pile or screw pile. If a piling mat is required, this should conform to the parameters for temporary ground protection given in 6.2.3.

9.5 As outlined below and in accordance with 7.2 of BS 5837:2012 and subject to agreement onsite with the project arboriculturalist, roots smaller than 25mm may be pruned back with those of a diameter greater than 25mm protected from damage.

9.6 Excavations within the Root Protection are to be excavated by hand -held tools and preferably by compressed air soil displacement.

a) Exposed roots are to be immediately wrapped or covered to prevent desiccation and to protect them from rapid temperature changes. Any wrapping are to be removed prior to backfilling, which is to take place as soon as possible.

b) Roots smaller than 25 mm diameter may be pruned back, making a clean cut with a suitable sharp tool (e.g. bypass secateurs or handsaw), except where they occur in clumps.

c) Roots occurring in clumps or of 25 mm diameter and over are to be severed only following consultation with an arboriculturalist.

d) Prior to backfilling, retained roots are to be surrounded with topsoil or uncompacted sharp sand (builders' sand is not be used), or other loose inert granular fill.

e) Soils or other suitable material are then to be replaced. This material should be free of contaminants and other foreign objects potentially injurious to tree roots and approved by the project arboriculturalist.

9.7 In accordance with clause 5.5.6 BS 5837:2012 all construction operations undertaken in the vicinity of trees need to be planned to avoid disturbance to the physical protection and the tree. Additional precautions outside of the construction exclusion zone include planning site operations to ensure that wide or tall loads or plant with booms or jibs and counterweights can operate without coming into contact with the retained trees. This is of particular relevance to the insertion of piled or beam foundations and the delivery and placement of heavy construction materials.

9.8 Reference is also made to materials which could contaminate the soils e.g concrete mixings, concrete washings and mortar which are not be discharged within 10m of the tree stem. Accordingly the materials should not be mixed or prepared within the Root Protection Area or on an area sloping towards the tree.

9.9 On completion of the works all surplus materials are to be collected and disposed of offsite, the temporary ground protection removed and the affected areas made good.

10.0 Removal Of Existing Hard Surfacing

10.1 Prior to the removal of the tarmac footpaths within the RPA of G04 appropriate tree protection fencing and ground protection is to be installed as detailed within the Tree Protection Plan 20-79-08 to protect the existing trees in accordance with BS 5837:2012.

10.2 Care is to be taken not to disturb tree roots that might be present beneath the existing surfacing. Hand-held tools or appropriate pedestrian operated machinery is to be used (under arboricultural supervision) to remove the existing surface, working backwards over the area, so that the machine is not moving over the exposed ground

10.3 Any exposed tree roots are to be treated in accordance with section 7.2 of BS5837:2012 and as detailed above.

10.4 Any sections of the existing tarmac footpath that are within the RPA's trees to be retained and fall within the proposed tarmac footpath areas are to be assessed for their suitability of re-use, thus negating the need for deep excavations. Such areas of existing tarmac footpath that are suitable for re-use are to be reduced and additional base and wearing courses installed as necessary.

11.0 New Permanent Hard Surfacing Construction

11.1 The construction of new permanent hard surfacing within the root protection area is to be of design that does not require excavation into the soil, including through lowering of levels and/or scraping, other than the removal, using hand tools, of any turf layer or other surface vegetation in accordance with Clause 7.4.2 of BS5837:2012.

11.2 The structure of the hard surface is to be designed in accordance with the typical detail below (refer to the Tree Protection Plan 20-79-08) by the project engineers to avoid localized compaction by evenly distributing the loading over the track width and wheelbase of any vehicles expected to use the access incorporating a three dimensional cellular confinement system or similar within the subbase to act as a load suspension layer.

11.3 The drive materials and edgings are to conform with clause 7.4 and Annex A1.5 of BS5837:2012 to local authority approval. Hard surfaces above the granular material are to be permeable and gas porous, such as washed gravel, proprietary infiltration system block pavers or insitu concrete (with formed aeration holes). Edgings are to be non invasive ground contact structures such as pegged timber boards, pinned timber sleepers, gabions or proprietary products.

3.0 TYPICAL PERMEABLE / NO DIG PAVING DETAIL:
(Scale 1:20)

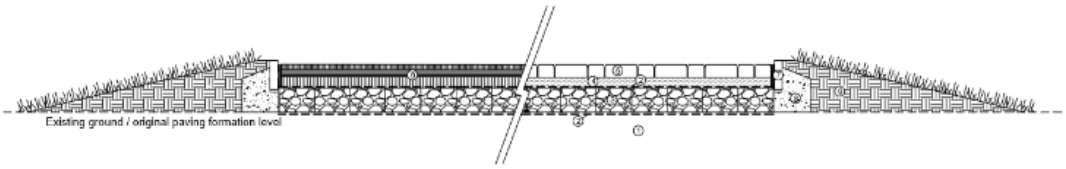

NOTES:

1. EXISTING GROUND: existing ground / soil within root protection area to be undisturbed. Area to be cleared of vegetation (i.e brambles, perennial weed growth, scrub) by hand prior to installation.

2. GEOTEXTILE: Treetex geotextile to be laid to existing on existing ground and to top of Cellweb system.

3. CELLULAR CONFINEMENT SYSTEM: 75-200mm depth geocell confinement system such as Cellweb TRP to accommodate likely loading infilled with clean (no fines) angular stone infill.

4. LAYING COURSE: 50mm, 5mm SS crushed stone laying course to BS 5882.

5. PERMEABLE BLOCK PAVING: 60mm depth permeable block paving laid 90 degree herringbone with 2 courses in stretcher bond to all edges

6. PERMEABLE TARMAC: open textured porous asphalt to engineers details.

7. PIN KERB: 50x150mm pcc pin kerb with 15mm upstand on concrete bed and haunch (above ground level).

8. TOPSOIL: topsoil backfill to edge of kerb to conceal concrete bed and haunch.

NB Permeable porous paving to be to engineers specification to accommodate the likely loading to which it will be subjected.

11.4 For roads or other new surfaces likely to be subject to de-icing salt application, an impermeable barrier is to be incorporated to prevent contamination of the rooting area. Run-off is to be directed away from the RPA. In addition where a permeable surface is to be used by vehicular traffic, a geotextile is to be installed beneath the sub base to help prevent pollution contamination of the rooting area below.

11.5 Where there is a risk of waterlogging, the design is to incorporate appropriate land drainage. Land drainage within the RPA is to be designed to avoid damage to the tree and the soil structure, e.g. sand slitting formed by compressed air soil displacement with the slits set radially to the tree.

11.6 Account is to be taken of finished levels in relation to adjacent structures, including damp-proof courses, garage slabs and links to existing vehicular cross-overs.

12.0 Fencing & Gate installation:

12.1 The proposals require the installation of new gates and timber post and rail fencing within the RPA of trees T01, G06, G04 and T22 to T38 to the North-eastern and South-eastern boundaries and therefore require careful consideration is required to ensure the existing trees are protected during construction and to ensure that the gate and fence posts are to be installed whilst causing minimal damage to the tree.

12.2 To limit ground compaction access to the fencing and gate locations is to be from the existing / proposed hard standing and carried out on completion of the main works. The fence posts within the RPA are to be driven and not concreted in place.

12.3 The proposed locations of the gate and fence posts are to be set out in advance of installation, with the fence posts no closer than 1 metre to the trees be retained. A site investigation is to be carried out to determine their optimal location whilst avoiding damage to structural roots by means of trial holes made with a post hole bar to a depth of 600 mm.

12.4 On completion of the works all surplus materials are to be collected and disposed of offsite, any temporary ground protection removed and the affected areas made good.

13.0 Underground Services

13.1 Underground services are to be routed outside of the construction exclusion zone and root protection areas of trees to be retained as demarcated on the Tree Protection Plans 20-79-07 & 20-79-08 entering the site from Coniston Crescent beneath the access road and tarmac footpath to the West.

14.0 Soft Landscape Implementation

14.1 The proposals require the installation of hedgerow planting within and at the edge of the RPA of trees T01, G06, G04 and T22 to T38 and therefore careful consideration is required to ensure the existing trees are protected during implementation including how the hedges are to be planted whilst causing minimal damage to the trees.

14.2 To limit the risk of ground compaction, access to the planting areas is to be from the existing and proposed hard standing with the preparation, cultivation and planting works carried out after the completion of the main construction activities using hand held tools.

14.3 To avoid unnecessary root damage, no cultivation of the topsoil is to be carried out within the Tree Protection Areas of the retained trees. Tree and shrub transplants or whips are to be notch planted. No standard tree pits are to be excavated within the root protection areas of retained trees.

14.4 The soft landscape areas outside of the construction exclusion zones / RPAs of the retained trees are to be set out, cultivated and planted as required prior to the removal of the tree protection fencing. The landscape works within the construction exclusion zones area to be carried out by hand only.

14.5 Prior to planting within the RPA the proposed locations of the transplants / whips are to be set out in advance and trial pit investigations using handheld tools to a maximum depth of 150 mm are to be carried out. Where large roots (greater than 25mm in diameter) are exposed the planting locations are to be changed to avoid damaging the roots.

15.0 Arboricultural Supervision

15.1 The erection of the phase 1 and phase 2 tree protection fencing and ground protection is to be inspected and approved by Bea Landscape Design prior to the commencement of construction.

15.2 All works within the construction exclusion zones / root protection areas of those trees to be retained are to be supervised by Bea Landscape Design with engineering support.

15.3 Tree surgery recommendations are to be approved with the local authority tree officer and carried out prior to construction. Tree works are to be carried out by a Arboricultural Association registered Tree Surgeon, refer to the Schedule of Tree Works.

Appendix A: Technical Definitions

Access Facilitation Pruning:	One off tree pruning operation, the nature and effects of which are without significant adverse impact on tree physiology or amenity value, which is directly necessary to provide access for operations on site.
Arboricultural Impact Assessment	An evaluation of the direct and indirect effects of the proposed design on the trees identified within the Tree Survey, where necessary recommending mitigation or amendments to the design.
Arboricultural Method Statement	Methodology for the implementation of any aspect of development that is within the root protection area, or has the potential to result in loss of or damage to a tree to be retained.
Construction Exclusion Zone	An area based on the root protection area from which access is prohibited for the duration of a project
Root Protection Area (RPA)	The minimum area around a tree deemed to contain sufficient roots and rooting volume to maintain the tree's viability, and where the protection of the roots and soil structure is considered a priority
Tree Protection Plan	A scale drawing informed by descriptive text where necessary, based upon finalised proposals, showing trees for retention and illustrating the tree and landscape protection measures.

Appendix B: References

1. BSI (2012) '*British Standard 5837:2012 Trees in relation to design demolition and construction – recommendations*' British Standards Institution, London

2. NJUG Volume 4 (2007) '*Guidelines for the planning, installation and maintenance of utility apparatus in proximity to trees.*' The National Joint Utilities Group

3. BSI (2010) '*Tree work – Recommendations*' British Standards Institution, London

LEGEND: TREE PROTECTION TO BS 5837:2012

- TREE PROTECTION FENCE: Phase 1 fencing to be constructed in accordance with BS5837 prior to commencement.
- CONSTRUCTION EXCLUSION ZONE: to be protected from construction in accordance with BS5837.
- GROUND PROTECTION: root protection area to be protected from compaction during construction in accordance with BS5837 as per typical detail 1.0.
- DEMOLISHED BUILDING FOOTPRINT
- EXISTING HARD SURFACING
- DIMENSIONS: setting out dimensions from trunk of retained trees or other existing site features. Phase 2 fencing to be erected prior to removal of Phase 01 fencing.
- TREES TO BE RETAINED: with root protection zone illustrated. (T1)
- TREE REMOVAL: trees to be removed to enable construction.

ARBORICULTURAL METHOD STATEMENT: refer to the Arboricultural Method Statement 2079/EH/AMS001 for more detailed information.

1.0 TEMPORARY TREE GROUND PROTECTION:
Pedestrian operated plant < 2 tonnes
(Scale 1:20)

NOTES:

1. EXISTING GROUND: existing ground / soil within root protection area to be undisturbed. Area to be cleared of vegetation (i.e brambles, perennial weed growth, scrub) by hand prior to installation.

2. GEOTEXTILE: terram 11000 geotextile to be laid to existing on existing ground.

3. COMPRESSION RESISTANT LAYER: minimum layer of 150mm woodchip from site tree work arisings or contract grade bark mulch.

4. TIMBER EDGE: pressure treated 50mm x 150mm pegged timber edging boards. Pegs 50mm x 50mm x 450mm at 500mm centres.

5. GROUND PROTECTION BOARDS: steel road plates pegged in position or proprietary inter-linked ground protection boards such as Grounds Guards 'Multi Track' system.

TREE PROTECTION NOTES:
'Trees in relation to design demolition and construction' BS5837:2012

1.0 PRIOR TO COMMENCEMENT OF WORKS:

1.1 PRIOR TO COMMENCEMENT: all trees that are being retained onsite shall be protected by barriers and / or ground protection before any materials or machinery are brought onto the site, and before any demolition, development or stripping of soil commences. The 'Root Protection Area' (RPA) associated with existing trees designated for retention shall be protected from damage by erection of scaffold framework barriers in accordance BS 5837:2012 Figure 2 including where specified appropriate ground protection.

1.2 EXTENT OF ROOT PROTECTION AREA (RPA): as shown on the Tree Protection Plan (TPP) the RPA is generally to be in accordance with Annex D, Table D.1 'Root Protection Area.' - as an area equivalent to a circle radius 12 times the stem diameter (single stem trees) or based on the combined stem diameter for multistem trees (trees with more than one stem arising below 1.5m above ground level) refer to Clause 4.6.

1.3 TREE PROTECTION BARRIER: a vertical and horizontal scaffold framework, well braced to resist impacts as illustrated below (refer to Figure 2 of BS5837:2012). The vertical tubes should be spaced at a maximum interval of 3 metres and driven securely into the ground. Care should be taken to avoid underground services and contact with structural roots. In the presence of underground services, retained hard surfacing or where special circumstances dictate an alternative specification as illustrated in Figure 3 of BS5837:2012 may be acceptable subject to agreement with the project arboriculturalist and the local planning authority.

All weather site notices should be attached to the barrier with words such as "CONSTRUCTION EXCLUSION ZONE - NO ACCESS". Once installed barriers and ground protection shall be not be removed or altered without prior approval of the project arboriculturalist and where necessary approval form the local planning authority.

1. Standard scaffold poles
2. Heavy gauge 2m tall galvanised tube and weld mesh infill panels
3. Panels secured to uprights and cross members with wire ties
4. Ground Level
5. Uprights driven into ground until secure (minimum depth 0.6m)
6. Standard scaffold clamps

2.0 ADDITIONAL PRECAUTIONS:

2.1 Planning of site operations should take sufficient account of wide or tall loads, or plant with booms, jibs or counterweights (including drilling & piling rigs) tin order that they can operate without coming into contact with retained tree. The transit or traverse of plant in proximity to trees shall be conducted under supervision of a bankman to ensure adequate clearance from trees is maintained at all times. Access facilitation pruning as agreed with the project arboriculturalist and/or local authority should be undertaken where necessary to maintain clearance. NB Works to trees protected by a Tree Preservation Order or within a Conservation Area will need approval by the local authority.

2.2 Any materials whose accidental spillage would cause damage to a tree should be stored and handled well away from the outer edge of its RPA e.g. concrete mixings, diesel oil and vehicle washings. Allowances shall be made for sloping ground to avoid damaging materials running towards retained trees.

2.3 Fires on sites should be avoided. Where they are unavoidable, they should not be lit in a position where heat could affect foliage or branches. The potential size of a fire and wind direction should be taken into account when determining its location, and should be attended at all times until safe to leave.

2.4 Trees are not to be used as anchorages for equipment, or for other purposes. Notice boards, telephone cables, or other services should not be attached to any part of the tree.

2.5 The dumping of spoil or rubbish, placing of temporary accommodation and storage of materials within the root protection area is prohibited.

2.6 The change of ground level, excavating, stripping or disturbing topsoil within the RPA is prohibited.

3.0 GROUND PROTECTION DURING DEMOLITION & CONSTRUCTION

3.1 Where construction working space or temporary construction access is specified within the RPA, this should be facilitated by a set-back in the alignment of the tree protection barrier. In such areas, suitable existing hard surfacing that is not proposed for re-use as part of the finished design should be retained to act as temporary ground protection during construction, rather than being removed during demolition. The suitability of such surfacing for this purpose should be evaluated by the project arboriculturalist and an engineer as appropriate.

3.2 Where the set-back of the tree protection barrier exposes unmade ground to construction damage, new temporary ground protection should be installed as part of the implementation of physical tree protection measures prior to work starting on site.

3.3 New temporary ground protection should be capable of supporting any traffic entering or using the site without being distorted or causing compaction of underlying soil, for example;

a) for pedestrian movements only, a single thickness of scaffold boards placed either on top of a driven scaffold frame, so as to form a suspended walkway, or on top of a compression-resistant layer (e.g. 100 mm depth of woodchip), laid onto a geotextile membrane;

b) for pedestrian-operated plant up to a gross weight of 2 t, proprietary, inter-linked ground protection boards placed on top of a compression-resistant layer (e.g. 150 mm depth of woodchip), laid onto a geotextile membrane;

c) for wheeled or tracked construction traffic exceeding 2 t gross weight, an alternative system (e.g. proprietary systems or pre-cast reinforced concrete slabs) to an engineering specification designed in conjunction with arboricultural advice, to accommodate the likely loading to which it will be subjected. If necessary sand should be laid on the ground as a compressible layer.

Refer any query to office of origination.

rev	date:	amendments:	ath:
(-)	(00/00/0000)	(.....)	(-)

bea landscape design ltd

client:
TAYLOR WIMPEY (WEST MIDLANDS) & SEVERN ACADEMIES EDUCATIONAL TRUST

project:
WINDERMERE GRANGE, STOURPORT

title:
TREE PROTECTION PLAN PHASE 1

status:
PLANNING

date:	drawn:	number:
JAN'21	E.C.H	20-79-07
scale@A0:	**checked:**	**revision:**
1:500	T.G-W	(-)

Landscape Institute Registered Practice

Bea Landscape Design Ltd
132A 'The Westlands', Compton Road, Wolverhampton, WV3 9QB
T: 01902 424 950 / 01902 425 001
E: info@bealandscape.co.uk
W: www.bealandscape.co.uk

LEGEND: TREE PROTECTION TO BS 5837:2012

- TREE PROTECTION FENCE: Phase 2 fencing to be constructed in accordance with BS5837 on completion of main construction works and prior to removal of the Phase 1 fence.
- CONSTRUCTION EXCLUSION ZONE: to be protected from construction in accordance with BS5837.
- GROUND PROTECTION: root protection area to be protected from compaction during construction in accordance with BS5837 as per typical detail 1.0.
- DEMOLISHED BUILDING FOOTPRINT
- EXISTING HARD SURFACING
- POROUS PAVING: access drive and paving within root protection zones to be porous paved and of 'no dig' construction as typical detail 3.0 and to engineers details.
- NO DIG HARD SURFACE: pedestrian footpath within root protection zones to be of 'no dig' construction as typical detail 2.0 and to engineers details.
- DIMENSIONS: setting out dimensions from trunk of retained trees or other existing site features. Phase 2 fencing to be erected prior to removal of Phase 01 fencing.
- TREES TO BE RETAINED: with root protection zone illustrated.
- TREE REMOVAL: trees to be removed to enable construction.

ARBORICULTURAL METHOD STATEMENT: refer to the Arboricultural Method Statement 2079/EH/AMS001 for more detailed information.

1.0 TEMPORARY TREE GROUND PROTECTION: Pedestrian operated plant < 2 tonnes (Scale 1:20)

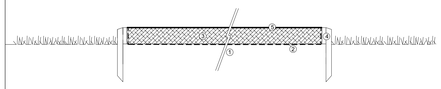

NOTES:

1. EXISTING GROUND: existing ground / soil within root protection area to be undisturbed. Area to be cleared of vegetation (i.e brambles, perennial weed growth, scrub) by hand prior to installation.
2. GEOTEXTILE: terram 11000 geotextile to be laid to existing on existing ground.
3. COMPRESSION RESISTANT LAYER: minimum layer of 150mm woodchip from site tree work arisings or contract grade bark mulch.
4. TIMBER EDGE: pressure treated 50mm x 150mm pegged timber edging boards. Pegs 50mm x 50mm x 450mm at 500mm centres.
5. GROUND PROTECTION BOARDS: steel road plates pegged in position or proprietary inter-linked ground protection boards such as Grounds Guards 'Multi Track' system.

2.0. TYPICAL NO DIG BREEDON GRAVEL 1.8M FOOTPATH: (Scale 1:20)

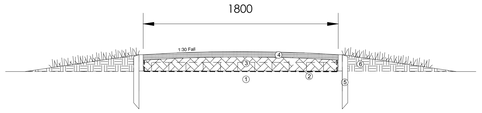

NOTES:

1. EXISTING GRASS: path route to be sprayed out prior 2 weeks prior to commencement.
2. GEOTEXTILE: terram geogrid TX160 above Terram T1000 geotextile..
3. SUBBASE: buff coloured compacted DOT Type 1 100-130mm depth to achieve cambered surface (1:30 camber gradient) including 75mm depth geocell confinement system.
4. BREEDON GOLDEN AMBER GRAVEL: well consolidated to 50mm depth watered, rolled cambered to shed water (1:30 fall gradient).
5. TIMBER EDGE: pressure treated 50mm x 150mm pegged timber edging boards. Pegs 50mm x 50mm x 450mm at 500mm centres.
6. TOPSOIL: topsoil to be placed to either side of no dig path to conceal timber edging and seeded on completion.

TREE PROTECTION NOTES: 'Trees in relation to design demolition and construction' BS5837:2012

1.0 PRIOR TO COMMENCEMENT OF WORKS:

1.1 PRIOR TO COMMENCEMENT: all trees that are being retained onsite shall be protected by barriers and / or ground protection before any materials or machinery are brought onto the site, and before any demolition, development or stripping of soil commences. The 'Root Protection Area' (RPA) associated with existing trees designated for retention shall be protected from damage by erection of scaffold framework barriers in accordance BS 5837:2012 Figure 2 including where specified appropriate ground protection.

1.2 EXTENT OF ROOT PROTECTION AREA (RPA): as shown on the Tree Protection Plan (TPP) the RPA is generally to be in accordance with Annex D, Table D.1 'Root Protection Area.' - as an area equivalent to a circle radius 12 times the stem diameter (single stem trees) or based on the combined stem diameter for multistem trees (trees with more than one stem arising below 1.5m above ground level) refer to Clause 4.6.

1.3 TREE PROTECTION BARRIER: a vertical and horizontal scaffold framework, well braced to resist impacts as illustrated below (refer to Figure 2 of BS5837:2012). The vertical tubes should be spaced at a maximum interval of 3 metres and driven securely into the ground. Care should be taken to avoid underground services and contact with structural roots. In the presence of underground services, retained hard surfacing or where special circumstances dictate an alternative specification as illustrated in Figure 3 of BS5837:2012 may be acceptable subject to agreement with the project arboriculturalist and the local planning authority.

All weather site notices should be attached to the barrier with words such as "CONSTRUCTION EXCLUSION ZONE - NO ACCESS". Once installed barriers and ground protection shall be not be removed or altered without prior approval of the project arboriculturalist and where necessary approval form the local planning authority.

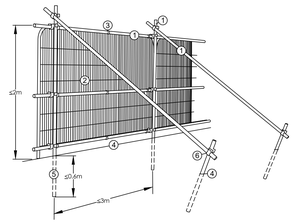

1. Standard scaffold poles
2. Heavy gauge 2m tall galvanised tube and weld mesh infill panels
3. Panels secured to uprights and cross members with wire ties
4. Ground Level
5. Uprights driven into ground until secure (minimum depth 0.6m)
6. Standard scaffold clamps

2.0 ADDITIONAL PRECAUTIONS:

2.1 Planning of site operations should take sufficient account of wide or tall loads, or plant with booms, jibs or counterweights (including drilling & piling rigs) tin order that they can operate without coming into contact with retained tree. The transit or traverse of plant in proximity to trees shall be conducted under supervision of a banksman to ensure adequate clearance from trees is maintained at all times. Access facilitation pruning as agreed with the project arboriculturalist and/or local authority should be undertaken where necessary to maintain clearance. NB Works to trees protected by a Tree Preservation Order or within a Conservation Area will need approval by the local authority.

2.2 Any materials whose accidental spillage would cause damage to a tree should be stored and handled well away from the outer edge of its RPA e.g. concrete mixings, diesel oil and vehicle washings. Allowances shall be made for sloping ground to avoid damaging materials running towards retained trees.

2.3 Fires on sites should be avoided. Where they are unavoidable, they should not be lit in a position where heat could affect foliage or branches. The potential size of a fire and wind direction should be taken into account when determining its location, and should be attended at all times until safe to leave.

2.4 Trees are not to be used as anchorages for equipment, or for other purposes. Notice boards, telephone cables, or other services should not be attached to any part of the tree.

2.5 The dumping of spoil or rubbish, placing of temporary accommodation and storage of materials within the root protection area is prohibited.

2.6 The change of ground level, excavating, stripping or disturbing topsoil within the RPA is prohibited.

3.0 GROUND PROTECTION DURING DEMOLITION & CONSTRUCTION

3.1 Where construction working space or temporary construction access is specified within the RPA, this should be facilitated by a set-back in the alignment of the tree protection barrier. In such areas, suitable existing hard surfacing that is not proposed for re-use as part of the finished design should be retained to act as temporary ground protection during construction, rather than being removed during demolition. The suitability of such surfacing for this purpose should be evaluated by the project arboriculturalist and an engineer as appropriate.

3.2 Where the set-back of the tree protection barrier exposes unmade ground to construction damage, new temporary ground protection should be installed as part of the implementation of physical tree protection measures prior to work starting on site.

3.3 New temporary ground protection should be capable of supporting any traffic entering or using the site without being distorted or causing compaction of underlying soil, for example;

a) for pedestrian movements only, a single thickness of scaffold boards placed either on top of a driven scaffold frame, so as to form a suspended walkway, or on top of a compression-resistant layer (e.g. 100 mm depth of woodchip), laid onto a geotextile membrane;

b) for pedestrian-operated plant up to a gross weight of 2 t, proprietary, inter-linked ground protection boards placed on top of a compression-resistant layer (e.g. 150 mm depth of woodchip), laid onto a geotextile membrane;

c) for wheeled or tracked construction traffic exceeding 2 t gross weight, an alternative system (e.g. proprietary systems or pre-cast reinforced concrete slabs) to an engineering specification designed in conjunction with arboricultural advice, to accommodate the likely loading to which it will be subjected. If necessary sand should be laid on the ground as a compressible layer.

3.0 TYPICAL PERMEABLE / NO DIG PAVING DETAIL: (Scale 1:20)

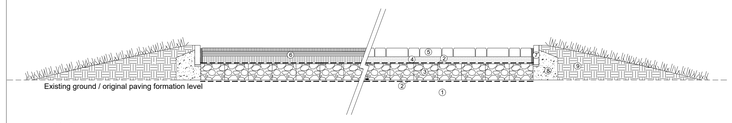

NOTES:

1. EXISTING GROUND: existing ground / soil within root protection area to be undisturbed. Area to be cleared of vegetation (i.e brambles, perennial weed growth, scrub) by hand prior to installation.
2. GEOTEXTILE: Treetex geotextile to be laid to existing on existing ground and to top of Cellweb system.
3. CELLULAR CONFINEMENT SYSTEM: 75-200mm depth geocell confinement system such as Cellweb TRP to accommodate likely loading infilled with clean (no fines) angular stone infill.
4. LAYING COURSE: 50mm. 5mm SS crushed stone laying course to BS 5882.
5. PERMEABLE BLOCK PAVING: 60mm depth permeable block paving laid 90 degree herringbone with 2 courses in stretcher bond to all edges
6. PERMEABLE TARMAC: open textured porous asphalt to engineers details.
7. PIN KERB: 50x150mm pcc pin kerb with 15mm upstand on concrete bed and haunch (above ground level).
8. TOPSOIL: topsoil backfill to edge of kerb to conceal concrete bed and haunch.

NB Permeable porous paving to be to engineers specification to accommodate the likely loading to which it will be subjected.

rev	date:	amendments:	alt:
(-)	(00/00/0000)	(.....)	(-)

bea landscape design ltd

client: TAYLOR WIMPEY (WEST MIDLANDS) & SEVERN ACADEMIES EDUCATIONAL TRUST

project: WINDERMERE GRANGE, STOURPORT

title: TREE PROTECTION PLAN PHASE 2

status: PLANNING

date:	drawn:	number:
JAN'21	E.C.H	20-79-08
scale@A0:	checked:	revision:
1:500	T.G-W	(-)

Landscape Institute Registered Practice

Bea Landscape Design ltd
132A 'The Westlands', Compton Road,
Wolverhampton, WV3 9QB

T: 01902 424 930 / 01902 425 001

E: info@bealandscape.co.uk
W: www.bealandscape.co.uk

landscape architects - arboricultural consultants
urban designers - environmental assessors

address:
132A The Westlands
Compton Road
Wolverhampton
WV3 9QB

tel: 01902 424 950
email: info@bealandscape.co.uk
web: www.bealandscape.co.uk