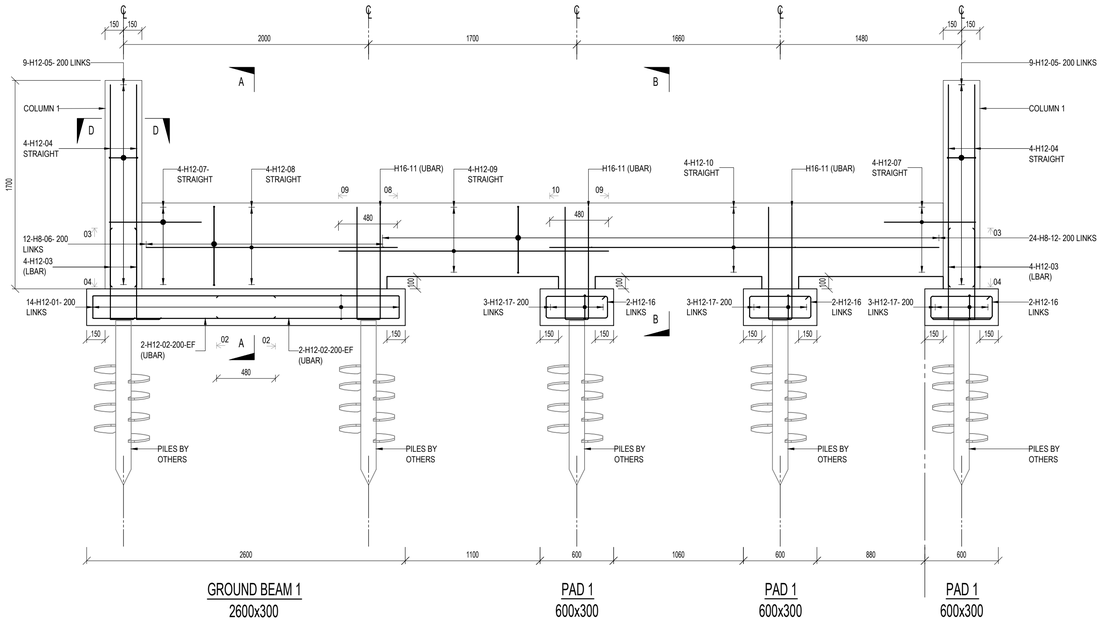

WALL 1
1:25

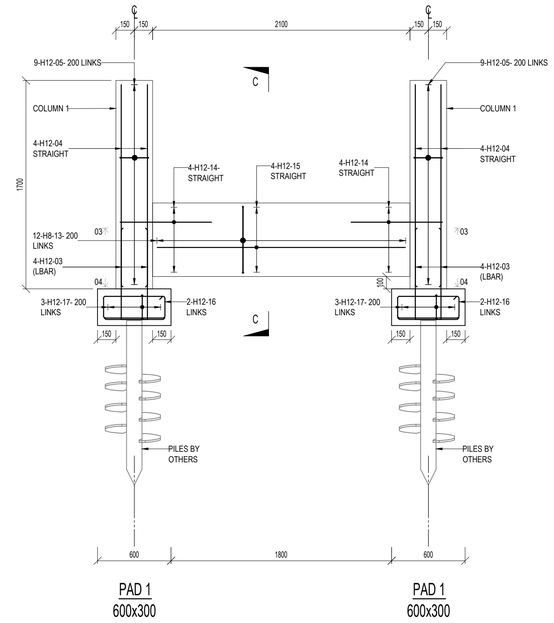

WALL 2
1:25

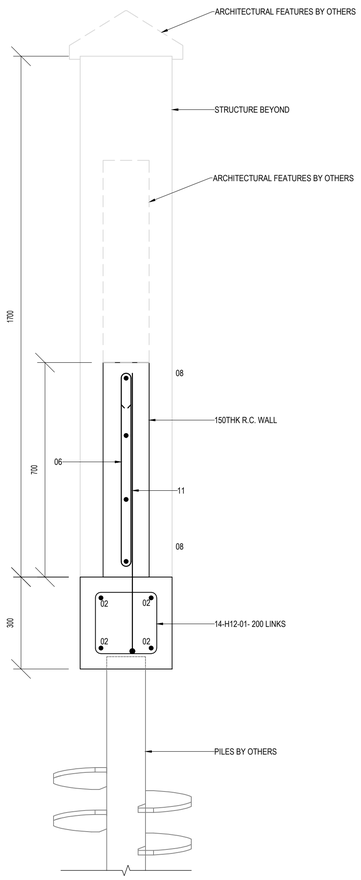

SECTION A-A
1:10

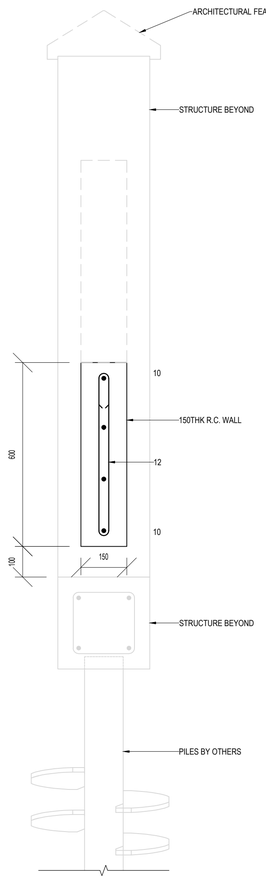

SECTION B-B
1:10

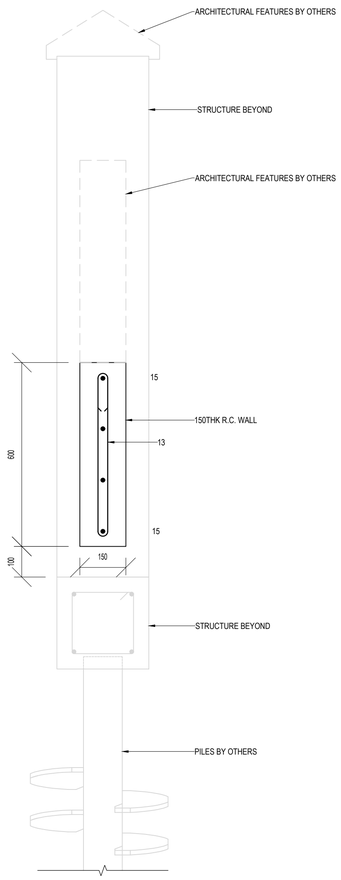

SECTION C-C
1:10

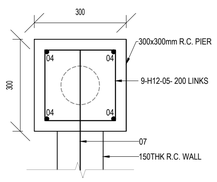

SECTION D-D
1:10

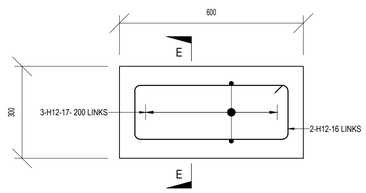

PAD 1 DETAILS (600x300)
1:10

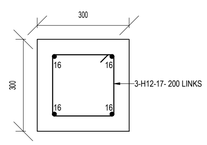

SECTION E-E
1:10

DISCLAIMER NOTES:

- THIS DOCUMENT IS COPYRIGHT OF THE ORIGINATOR AND MUST BE TREATED AS CONFIDENTIAL
- THIS DOCUMENT MUST NOT BE ALTERED, REPRODUCED OR DISTRIBUTED WITHOUT PRIOR WRITTEN CONSENT OF THE ORIGINATOR
- THIS DOCUMENT MUST NOT BE ALTERED - THE ORIGINATOR ACCEPTS NO RESPONSIBILITY FOR ANY DISCREPANCIES ARISING AS A RESULT OF THE ORIGINATORS INFORMATION BEING ALTERED BY OTHERS
- ANY DISCREPANCY MUST BE REPORTED TO THE ORIGINATOR
- DO NOT SCALE THIS DOCUMENT - USE FIGURED DIMENSIONS ONLY
- ALL DIMENSIONS MUST BE CHECKED ON SITE PRIOR TO COMMENCEMENT OF ANY RELATED WORKS
- THIS DOCUMENT MUST BE READ IN CONJUNCTION WITH ALL SUPPORTING DOCUMENTS PRODUCED BY THE ORIGINATOR AND OTHER PROJECT DISCIPLINES
- THE ORIGINATOR ACCEPTS NO RESPONSIBILITY FOR THE ACCURACY OF BACKGROUND INFORMATION PRODUCED BY THIRD PARTIES - THIS MUST BE TREATED AS INDICATIVE ONLY
- USERS OF THIS DOCUMENT ARE RESPONSIBLE FOR CHECKING WHICH REVISION IS CURRENT
- THE DOCUMENT STATUS "INFORMATION" OR "PRELIMINARY", INDICATES THAT THIS DRAWING IS FOR REFERENCE PURPOSES ONLY - THE ORIGINATOR WILL ACCEPT NO RESPONSIBILITY FOR THE COMPLETENESS OF INFORMATION UNDER THIS STATUS
- THE DOCUMENT STATUS "RECORD" OR "AS BUILT" HAS BEEN PREPARED, IN PART, BASED UPON INFORMATION FURNISHED BY OTHERS. WHILE THIS INFORMATION IS BELIEVED TO BE RELIABLE, THE ORIGINATOR ASSUMES NO RESPONSIBILITY FOR THE ACCURACY OF THIS "RECORD" OR "AS BUILT" DOCUMENT OR FOR ANY ERRORS OR OMISSIONS THAT MAY HAVE BEEN INCORPORATED INTO IT AS A RESULT OF INCORRECT INFORMATION PROVIDED TO THE ORIGINATOR. THOSE RELYING ON THE "RECORD" OR "AS BUILT" DOCUMENT ARE ADVISED TO OBTAIN INDEPENDENT VERIFICATION OF ITS ACCURACY

DRAWING NOTES:

CDM REGULATIONS 2015
SIGNIFICANT OR NON-OBVIOUS RISKS AND RISKS WHICH ARE DIFFICULT TO MANAGE ARE IDENTIFIED ON THIS DRAWING USING THE FOLLOWING SYMBOL IDENTIFIED TO THE RIGHT WITH BRIEF ACCOMPANYING TEXT. FOR FURTHER DETAILS OF THE RISKS IDENTIFIED BY DESIGNERS, REFERENCE SHOULD BE MADE TO CDM HAZARD REGISTER.

1.0 REINFORCEMENT DETAILS ON THIS DRAWING IS LISTED ON BAR BENDING SCHEDULE No.0301

2.0 COVER TO ALL REINFORCEMENT ON THIS DRAWING

BASE - TOP	50mm NOMINAL	(ALL SIDES)
BASE - BOTTOM	50mm NOMINAL	(ALL SIDES)
WALL	35mm NOMINAL	(ALL SIDES)
COLUMN	35mm NOMINAL	(ALL SIDES)

3.0 ALL CONCRETE C32/40 U.N.O.

4.0 MINIMUM LAP LENGTHS = 40d

REV	DESCRIPTION	DATE	BY	CHKD
-	ISSUED FOR PRELIMINARY	07/02/2020	PK	JH

ORIGINATOR:

RIDGE
PROPERTY & CONSTRUCTION CONSULTANTS

3 VALENTINE PLACE
LONDON, SE1 8QH

TEL: 020 7593 3400

WWW.RIDGE.CO.UK

CLIENT:
CHUBB EUROPEAN GROUP SE

IN ASSOCIATION WITH:
-

PROJECT:
28-30 WARWICK AVENUE W9 2PT

TITLE:
RETAINING WALL ELEVATION AND SECTIONS

DRAWN BY:	PK	SCALE:	AS SHOWN @ A1
CHECKED BY:	JH	DATE:	05/02/2020

STATUS:
PRELIMINARY

DRAWING No:

PROJECT:	ORG:	ZONE:	LEVEL:	TYPE:	ROLE:	NUMBER:	REV:
5011569	RDG	XX	XX	DR	S	0300	