envirotech

Ecological Consultants
Environmental and Rural Chartered Surveyors

Client: NHS.
Site: Countess of Chester Hospital
Emergency Department
Liverpool Rd, Chester CH2 1UL

Tree Survey and Impact Assessment

Prepared by
Antony Wood Cert Arb RFS
Yew Tree and Gardens

Green at Heart
BEN
GOLD

RICS
The mark of
property professionalism worldwide

Tel: 015395 61894
Mobile: 07812 081320
Email: info@envtech.co.uk
Web: www.envtech.co.uk
Envirotech NW Ltd
The Stables, Back Lane, Hale, Milnthorpe, Cumbria. LA7 7BL
Directors: A. Gardner BSc (Hons), MSc, CEnv, MCIEEM, MRICS, Dip NDEA
H. Gardner BSc (Hons), MSc, CEnv, MRICS
Registered in England and Wales. Company Registration Number 5028111

CONTENTS

1. SITE

A. SITE DESCRIPTION

1. The survey site is comprised of a section of the overall site at Countess of Chester Hospital, Liverpool Road, Chester.

2. Tree stock within the survey area is mainly comprised of three individual trees. These trees are located around the boundaries of the central car parking area of the site and within small areas of landscaping.

3. The site currently consists of existing buildings, areas of car parking, vehicle and pedestrian access routes. The site is bounded by further areas of the hospital buildings to the North, East, West and South.

4. See Appendix1, Appendix 2 and Appendix 3 for detailed tree list, site layout detail and images.

B. SURVEY DETAILS

1. The site was surveyed on 25/01/2021, tree heights were estimated via use of clinometer (Suunto PM-5), measurements of DBH taken at 1.5m height and crown spread was taken by ground measurements. The position of tree references within the site are taken from the supplied site plan. All images were taken at the date with Sony DSC-H400. Sun positions were estimated on site via Sun Surveyor software. Weather conditions were bright with full sun and light to no winds.

2. All surveying of tree stock on the site was carried out visually from the ground only. Where ivy cover was encountered on trees then only limited visual checking of structure and potential defects was possible.

3. At the time of surveying all trees were recorded on standard tree record sheets, see Appendix 1: Tree Schedule. Trees were surveyed throughout the entire site, detailed individual details were recorded for all significant trees within the existing site. Where larger numbers of smaller trees were encountered in the survey area these are included as a Group record which includes the approximate height range and maximum Diameter at Breast Height (DBH) of trees within the group, these groups are referred to by group i.e. Group 2 (G2).

4. The surveyed trees are categorized by the standard retention categories as defined in BS5837:2012. Such retention categories seek to inform the design process of trees which may be worthy of consideration for inclusion within the proposed development. All work recommendations relate to trees within the context of the current site layout and usage.

5. **Note**: the report and schedule recommendations form components of a development survey and are not intended to be used as a specific tree hazard assessment

6. Trees requiring removal to facilitate the proposed development, or which are unsuitable for retention are annotated in red on the Tree Constraints Plan and may be further identified in the work recommendation section of the Tree Schedule.

2. PROPOSED DEVELOPMENT

A. PROPOSED DEVELOPMENT

1. The proposed development layout is for the construction additional buildings to extend the existing Accident and Emergency Department as illustrated in Appendix 5: Tree Constraints Plan.

3. TREE PRESERVATION ORDERS AND CONSERVATION AREAS

A. SITE DESCRIPTION

1. The site is not located within a Conservation Area.

2. We have conducted an online check to establish the presence of any active TPO (Tree Preservation Order) within the site. The mapping facility of West Cheshire and Chester does not indicate any active TPO within or immediately adjacent to the development boundaries. Reference: https://maps.cheshirewestandchester.gov.uk/CWAC/webmapping/.

3. The status of all trees within and adjacent to the site boundaries should be verified to the undertaking of tree works or removals.

4. It should be noted that trees located outside of maintained grounds and not covered by an active TPO or conservation area are subject to the standard Felling License constraints imposed by the Forestry Commission. These regulations restrict the volume of timber which may be removed in a calendar quarter without a felling licence to 5 cubic metres.

5. Hedgerow regulations cover the protection of certain established field boundary hedges.

4. IMPACT OF DEVELOPMENT ON TREE STOCK

A. CURRENT TREE STOCK

1. The current tree stock within the survey boundaries as defined by those trees within the area of the proposed development is detailed in Appendix 1 and outlined as follows.

2. Tree reference T1 is located within a narrow area of grass verge between the car parking area and the vehicle access route. It is a fastigiate Oak in the semi-mature age class, its form and structure are typical of the species / cultivar.

3. Tree reference T2 is located to the West of T1 within the same narrow grass verge, it is a Lime in the semi-mature age class. Due to the extensive spreading form of the crown, it has undergone previous pruning of the lower crown. This has resulted in numerous stub cut branches due to improper pruning techniques.

4. Tree reference T3 is located in a grass verge to the Eats of the existing parking areas. This is bounded by a main vehicle access route to the East and a sub-surface ducting route with concrete covers to the North. T3 is a Copper Beech and in keeping with the species / variety it has an expansive crown with leaders extending over 6m from the stem. T3 has a restricted root zone due to the existing access route to the East and the concrete service duct to the West.

5. We have categorised the above trees as retention category C due to a combination of their relatively young age / small size and the likely limited retention spans of T2 and T3 in the current site. Both trees are of species selections that will rapidly outgrow their current locations, this will create a need for repeated pruning works to contain / manage crown extents in relation to existing access routes.

6. No other trees or established hedges are located within the sphere of the development, several shrubs are located around the edges of the existing car parking within a low (<1.5m) amenity planting group.

4. IMPACT OF DEVELOPMENT ON TREE STOCK (CONT.)

B. PROPOSED DEVELOPMENT

1. Trees which are within the zone of potential impacts from the proposed development illustrated in Appendix 5: Tree Constraints Plan are detailed as follows.

2. Tree references T1 and T2 will require removal in the proposed development. Given the size / age of these trees their removal may be mitigated by replacement planting elsewhere within the site.

3. The proposed alterations to the parking area will not impact upon the retention of T3. The RPA of T3 would not extend into the development even if it were unrestricted, the presence of the existing underground duct will have prevented any root development to the West of the current grassed area.

4. No above ground conflicts will be created by the proposed development. The relationship between structures / access routes and T3 will be unchanged.

5. No other trees are directly or indirectly affected by the proposed development.

5. SUGGESTED MITIGATION MEASURES

A. GUIDELINES

1. Guidance for the protection and retention of trees within the site.
2. Erection of protective fencing as indicated in Appendix 5: Tree Constraints Plan.
3. No material storage should take place in these areas.
4. No mixing of cement-based or other building materials should take place within the root protection area, no storage of fuels should take place within this area.
5. The tree protection must remain in place until work is completed and there is no risk to the RPAs
6. Once construction has been completed and the landscaping phase is complete the protective fencing may be removed.
7. No specific guidance for the site is required.

B. PROTECTIVE FENCING

1. Once erected all protective fencing will be regarded as sacrosanct and will remain in place until the completion of the construction phase. It shall not be removed, relocated or breached at any time without consultation with the project arboriculturalist.
2. Protective fencing will be constructed of robust barriers fit for the purpose of excluding construction traffic form root protection areas. Details of appropriate fencing types are included in Appendix 6.
3. Signs will be affixed to every third panel stating, ‘Tree Protection Area Keep Out’. See Appendix 7 for example of signage.
4. All fencing will be securely affixed to avoid movement of fencing during the construction phase.
5. For the sections marked in purple on Appendix 5 fences will be constructed of site fencing of ‘Heras’ type which must be securely braced with additional measures to prevent movement of the fence during construction.
6. Indicative positions for protective fencing are indicated in purple on Appendix 5: Tree Constraints Plan.

5. SUGGESTED MITIGATION MEASURES (CONTINUED)

C. GENERAL PRINCIPLES TO AVOID DAMAGE TO TREES.

1. Protective fencing installed to prevent mechanical damage to trees adjacent to the development.
2. An indicative list of recommended practices during construction phase is listed below:
3. Once installed tree protection must remain in place and be observed at all times.
4. No fires within 10m of the crown of any retained trees.
5. Soil levels in rooting areas to be retained with minimal level changes, no greater increases than 300mm from existing levels.
6. No cement mixing/washout to take place within 15m of any retained trees.
7. No chemicals, bitumen etc. to be stored within 10m of any retained trees.
8. Any spillage of fuel, chemicals or contaminated water occurring within 2m of the root protection areas to be reported to project supervisor.
9. No additional underground services have been indicated to us at this time but they may be safely routed to avoid rooting zones, if additional services require routing through the root zones of trees for retention then appropriate sub surface or hand trenching methods should be used and guidance sought prior to any works being undertaken. See BS3857:2012.

D. MITIGATION PLANTING.

A specific landscaping plan has not been supplied to us at this time.

We have been requested to include an indicative proposal for replacement planting to offset the removal of T1 and T2 in the development.

Appendix 5a includes an indicative location for the planting of four replacement trees. This assumes that no underground services are located within the indicated location. If this location is unsuitable then the same volume and species selection could be distributed throughout the areas of maintained amenity grass adjacent to Valley Drive and the main car parking areas.

6. CONCLUSION

1. The proposed compound will not require the removal of any significant individual trees or groups of trees.

2. The proposed development will require the removal of two semi-mature trees, our references T1 and T2.

3. All other elements of the development are outside of plotted RPA and crown constraints and will not impact upon the retained tree stock, reference T3.

4. Tree protection fencing will be required for the protection of T3 during construction of the building and alterations to the car parking areas.

5. No current or future conflict between the proposed development and retained trees would be created.

6. The limited volume of tree removals required within the development could be mitigated by replacement planting within eth wider hospital site.

7. RECOMMENDATIONS

It is recommended that

The management of the development reflects the guidance contained within this report both for the management of trees for retention and the protection of same during the proposed development phase and that due consideration is given to the position of any development in relation to retained trees and the removal of trees which are unsuitable for long term retention from the site prior to any development.

Type	Name	Age	DBH	Height	1stB	N	E	S	W	Cond	Life Exp	Comments	Recommendations / development	RPR m	RPA m^2	Category
T1	Quercus robur fastigiata 'Kosters' Fastigiate Oak)	SM	260	11	2	1.7	1.7	1.7	1.7	Good	10+	Tree located in grass verge adjacent to access route / car park.	Will require removal in development	3.12	30.59	C1
T2	Tilia X europaea (Common Lime)	SM	265	5	2	3	3	3	3	Good	10+	Tree located in grass verge adjacent to access route / car park. Previous pruning of lower crown with multiple stub cuts. Species selection would be unsuitable for long term retention in location without repeated pruning	Will require removal in development	3.18	31.77	C1
T3	Fagus sylvatica 'Purpurea' (Copper Beech	SM	340	10	2	6.5	6.5	6.5	6.5	Good	10+	Located in grass verge with restricted root zone due to main vehicle access route to East and combined footway / subsurface ducting to West. Crown typical of species with billowing form spreading over access route	Existing root restrictions, size and location will allow retention in development. Tree is likely to have a limited future retention span due to mature size / spread and potential for impacts upon ducting and access route kerbs	4.08	52.3	C1

Table 1 **Cascade chart for tree quality assessment**

Category and definition	Criteria (including subcategories where appropriate)			Identification on plan
Trees unsuitable for retention (see Note)				
Category U Those in such a condition that they cannot realistically be retained as living trees in the context of the current land use for longer than 10 years	• Trees that have a serious, irremediable, structural defect, such that their early loss is expected due to collapse, including those that will become unviable after removal of other category U trees (e.g. where, for whatever reason, the loss of companion shelter cannot be mitigated by pruning) • Trees that are dead or are showing signs of significant, immediate, and irreversible overall decline • Trees infected with pathogens of significance to the health and/or safety of other trees nearby, or very low quality trees suppressing adjacent trees of better quality *NOTE Category U trees can have existing or potential conservation value which it might be desirable to preserve; see **4.5.7**.*			See Table 2
	1 Mainly arboricultural qualities	**2 Mainly landscape qualities**	**3 Mainly cultural values, including conservation**	
Trees to be considered for retention				
Category A Trees of high quality with an estimated remaining life expectancy of at least 40 years	Trees that are particularly good examples of their species, especially if rare or unusual; or those that are essential components of groups or formal or semi-formal arboricultural features (e.g. the dominant and/or principal trees within an avenue)	Trees, groups or woodlands of particular visual importance as arboricultural and/or landscape features	Trees, groups or woodlands of significant conservation, historical, commemorative or other value (e.g. veteran trees or wood-pasture)	See Table 2
Category B Trees of moderate quality with an estimated remaining life expectancy of at least 20 years	Trees that might be included in category A, but are downgraded because of impaired condition (e.g. presence of significant though remediable defects, including unsympathetic past management and storm damage), such that they are unlikely to be suitable for retention for beyond 40 years; or trees lacking the special quality necessary to merit the category A designation	Trees present in numbers, usually growing as groups or woodlands, such that they attract a higher collective rating than they might as individuals; or trees occurring as collectives but situated so as to make little visual contribution to the wider locality	Trees with material conservation or other cultural value	See Table 2
Category C Trees of low quality with an estimated remaining life expectancy of at least 10 years, or young trees with a stem diameter below 150 mm	Unremarkable trees of very limited merit or such impaired condition that they do not qualify in higher categories	Trees present in groups or woodlands, but without this conferring on them significantly greater collective landscape value; and/or trees offering low or only temporary/transient landscape benefits	Trees with no material conservation or other cultural value	See Table 2

envirotech

Tree Location Plan

Tree Locations by retention category
- Cat A
- Cat B
- Cat C
- Cat U

Root Protection Area (radius)
- RPA Category A
- RPA Category B
- RPA Category C
- Category U tree unsuitable for retention

Restricted Root Protection Area (polygon)

Surveyed Canopy Extents

Estimated Shadow Plot (midsummer)

Project Title:
Countess of Chester
Date of Survey:
25/01/2021
Surveyor:
A. Wood
Date File Created:
02/02/2021
1:200

Yew Tree & Garden
Yew Tree House
Hale Milnthorpe
Cumbria LA7 7BJ
015395 63527 07813897631
info@yewtreegardens.co.uk
www.yewtreegardens.co.uk

Note:
RPA only indicated for significant trees. Small garden trees and juvenile specimens may not be indicated
Retention Categories:
As defined in BS5837: 2012
RPA:
Plotted from individual RPA sheets.
Where restricted rooting conditions are present RPA is also plotted as an area polygon

Image date: 25/01/2021

APPENDIX 4

Selected Reference List

The Body Language of Trees by Claus Mattheck & Helge Breloer (1994) London:HMSO.
Diagnosis of ill-health in trees by R.G. Strouts and T.G. Winter. (2000) London:HMSO
Principles of Tree Hazard Assessment and Management by David Lonsdale.(1999) HMSO
BS5837:2012 British Standards Institute
BS3998:2010 British Standards Institute
Trees Their Use, Management, Cultivation and Biology Robert Watson 2006
Tree roots in the built environment (Research for Amenity Trees) (2013) Arboricultural Association
Law of Trees, Forests and Hedges
by Dr. Charles Mynors (Author) Sweet & Maxwell; 2nd Revised edition (14 Dec. 2011)
Assessment of Tree Forks, Assessment of Junctions For Risk Management by Dr. Duncan Slater : Arboricultural Association (Nov 2016)
Collins Tree Guide by Owen Johnson (2006): Harper Collins, London

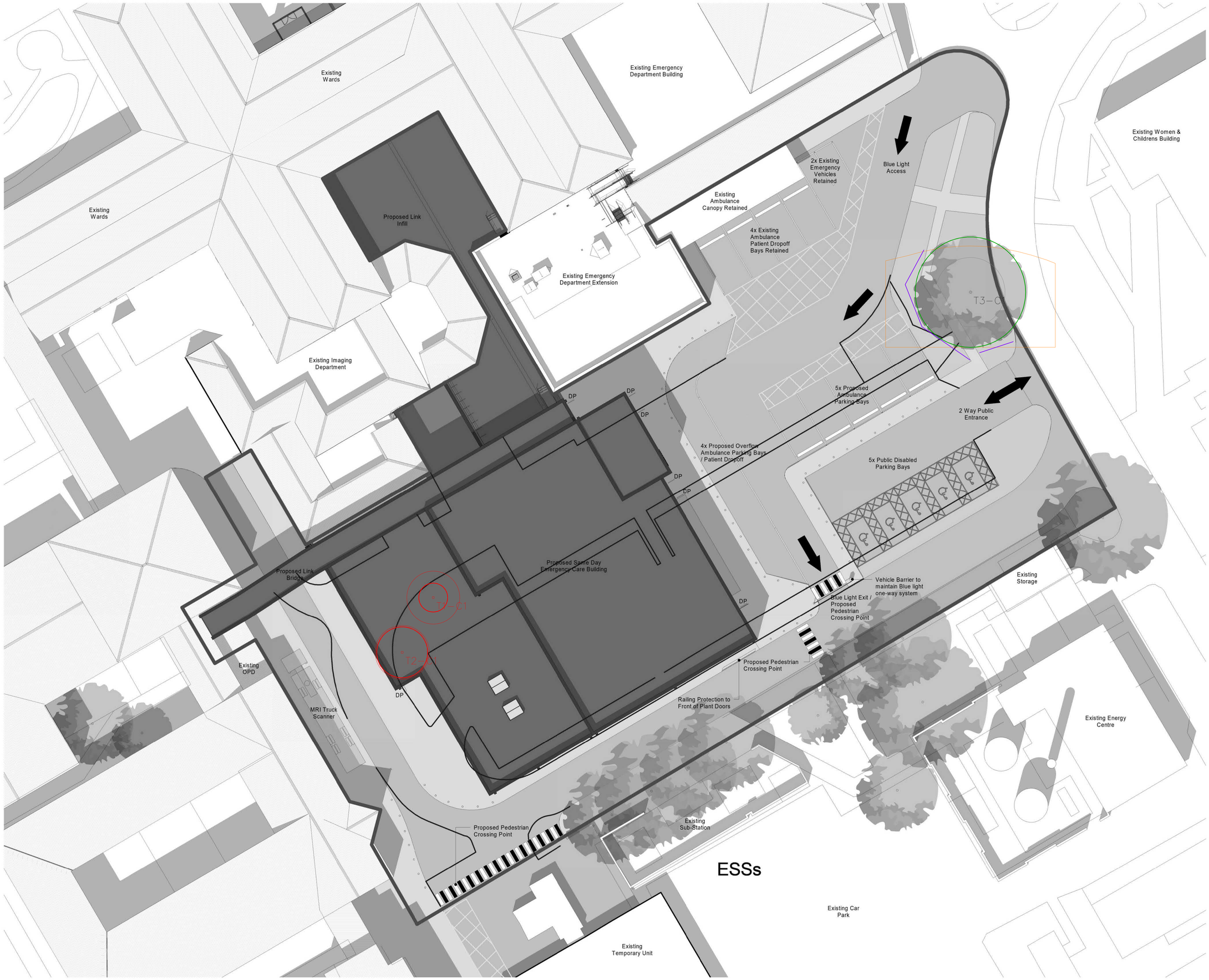

Notes

Key

SCALE 1 : 200

0 4 8 12

Indicates Red Line Boundary

Indicates Modified / Removed Road or Footpath

General Landscape key

Existing Soft or Hard Landscape Retained
To be Retained and made good where required.

Proposed Hard Landscape Paving
To Engineer's details and specification.

Proposed Hard Landscape Road
To Engineer's details and specification.

External Steps

Proposed Soft Landscape
Type & Planting Requirements to be developed

Existing Tree Retained
Subject to Tree Survey information.

Tree Constraints Plan

Tree Locations by retention category
Cat A
Cat B
Cat C
Cat U

Root Protection Area (radius)
RPA Category A
RPA Category B
RPA Category C
Category U tree unsuitable for retention

Restricted Root Protection Area (polygon)

Surveyed Canopy Extents

Estimated Shadow Plot (midsummer)

Tree Protection Fence

Ground Protection / Specific Working Areas

Project Title:
Countess of Chester
Date of Survey:
25/01/2021
Surveyor:
A. Wood
Date File Created:
02/02/2021
1:200

Yew Tree & Garden
Yew Tree House
Hale Milnthorpe
Cumbria LA7 7BJ
015395 63527 07813897631
info@yewtreegardens.co.uk
www.yewtreegardens.co.uk

Note:
RPA only indicated for significant trees. Small garden trees and juvenile specimens may not be indicated
Retention Categories:
As defined in BS5837: 2012
RPA:
Plotted from individual RPA sheets.
Where restricted rooting conditions are present RPA is also plotted as an area polygon

Rev	Description	Date	Dr by	App by
P1	Issued For Planning	25/01/2021	KM	RB

original by	date created	approved by
K E Maddison	25.01.2021	RB

AHR Architects Ltd
First Floor
Victoria House
Victoria Quay
Shrewsbury
SY1 1HH
United Kingdom

T +44(0)1743 283000
F +44(0)1743 232717
E shrewsbury@ahr.co.uk
www.ahr.co.uk

client name
NHS | Countess of Chester

project
Emergency Department

drawing
Existing and Proposed Site Overlay Illustration

computer file	plot date
C:\Revit Projects\CCSDEC-AHR-ZZ-ZZ-M3-A-0001_SITE_MODEL_kyle.maddison.rvt	25.01.2021

project number	scale	
2012.000.000	1 : 200	@A1

drawing number	rev	issue status
CCSDEC-AHR-ZZ-XX-DR-A-0814	P1	S2

Appendix 5a: Replacement planting

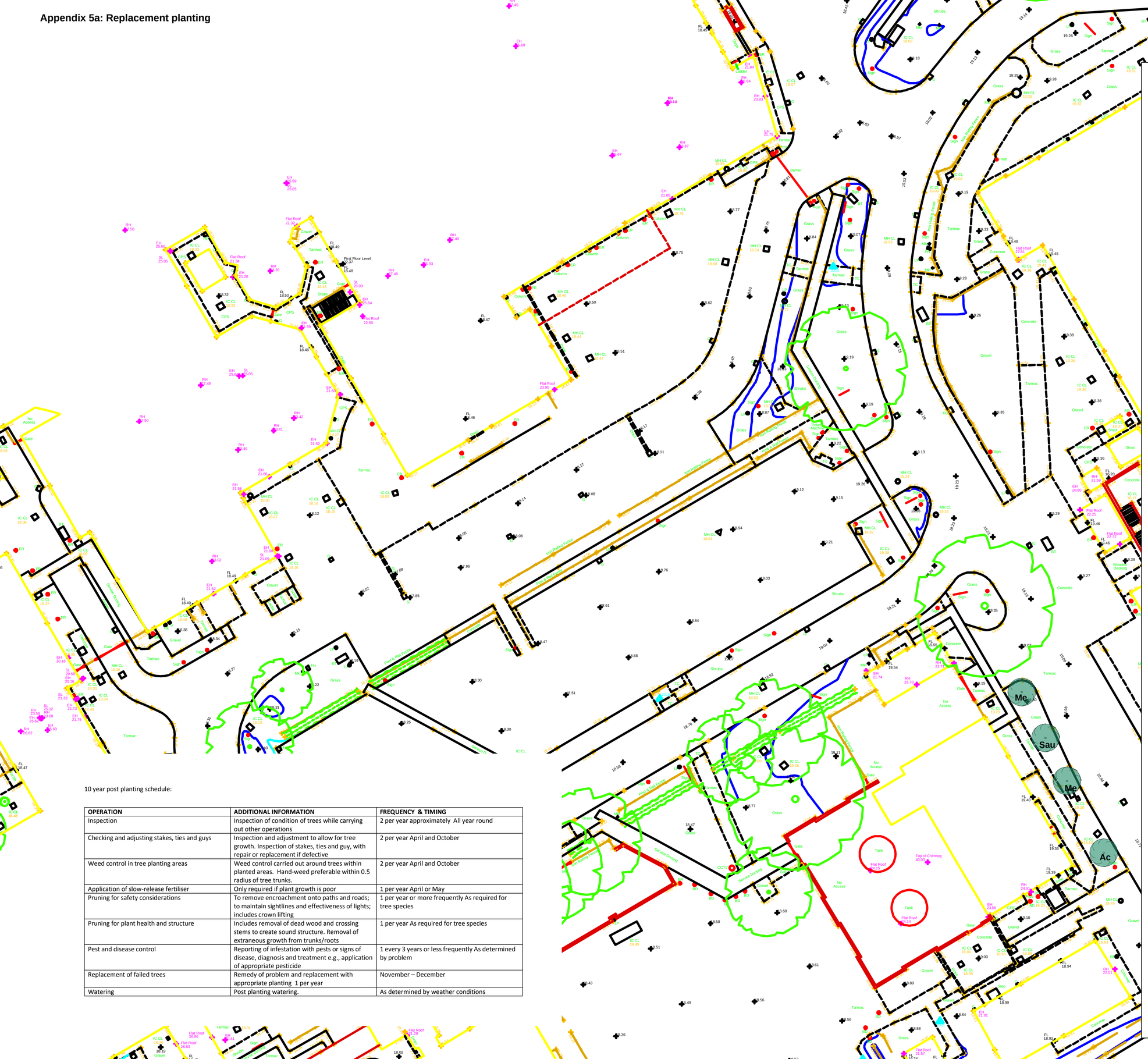

10 year post planting schedule:

OPERATION	ADDITIONAL INFORMATION	FREQUENCY & TIMING
Inspection	Inspection of condition of trees while carrying out other operations	2 per year approximately All year round
Checking and adjusting stakes, ties and guys	Inspection and adjustment to allow for tree growth. Inspection of stakes, ties and guy, with repair or replacement if defective	2 per year April and October
Weed control in tree planting areas	Weed control carried out around trees within planted areas. Hand-weed preferable within 0.5 radius of tree trunks.	2 per year April and October
Application of slow-release fertiliser	Only required if plant growth is poor	1 per year April or May
Pruning for safety considerations	To remove encroachment onto paths and roads; to maintain sightlines and effectiveness of lights; includes crown lifting	1 per year or more frequently As required for tree species
Pruning for plant health and structure	Includes removal of dead wood and crossing stems to create sound structure. Removal of extraneous growth from trunks/roots	1 per year As required for tree species
Pest and disease control	Reporting of infestation with pests or signs of disease, diagnosis and treatment e.g., application of appropriate pesticide	1 every 3 years or less frequently As determined by problem
Replacement of failed trees	Remedy of problem and replacement with appropriate planting 1 per year	November – December
Watering	Post planting watering.	As determined by weather conditions

Tree Planting - replacement trees

Species / size

Ac: *Acer campestre* 'Elsjrik' (Field Maple): 10 - 12 cm root bal **x 1**

Me: *Malus Evereste* (Crab Apple): 10 - 12 cm root ball **x 2**

Sau: *Sorbus aucuparia 'Shearwater Seedling'* (Rowan) : 10 - 12 cm root ball **x 1**

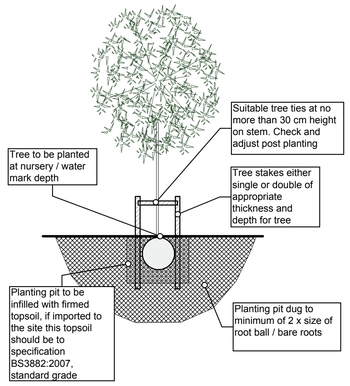

Planting and Aftercare

b. Tree planting

1. Sizes/planting: Standards in the size range 8 -10 cm and 10-12 cm girth.

2. All tree stock should be to the specifications detailed in BS3936-1 Nursery Stock

3. All trees and shrubs shall conform to the British Standard for Nursery Stock – BS 3936, parts 1, 2, 3, 4, & 5, as published by the BSI.

4. They shall be nursery grown,"bare root", "root-balled", or "container grown", unless otherwise specified. No plant shall have a "man made" ball.

5. Bare root shrubs or trees may be used where specifically indicated on plans.

6. All deciduous street trees or trees adjacent to footpaths shall be free of branches to 2m above ground unless specified.

7. Trees with bark included within major branch unions will not be accepted.

8. Roots of field-grown trees must be intact and protected from desiccation with plastic wrap, they must be planted as soon as practicable following delivery to site.

9. Container grown trees must have the container on the root ball or the root ball must be appropriately protected from desiccation.

10. Trees with root balls that have bound or girdled roots are not acceptable and should be rejected.

11. The trees within the boundary areas and margins of the site should be protected by staking to windward with suitable stakes and ties at no more than 30 cm or 1/3 height to encourage root development. Trees should be planted in the recommended manner in respect of planting hole size in relation to bare root / root ball size and be in-filled with quality topsoil. See planting diagram on this plan.

Watering - All Tree and Shrub Planting:

Watering should be to the saturation of the ground to 'field capacity' at planting and regular watering thereafter during the establishment period, year 1 and 2. Additional watering should be applied in prolonged periods of dry weather during the initial two growing seasons. This watering should be to soil saturation (field capacity) during periods of dry weather in spring and summer months

Note. dry periods to be regarded as a maximum of 5 days without rain during years 1and 2 post planting.

Appendix 6 - Protective Fencing

Tree protective fencing

Figure 2 **Default specification for protective barrier**

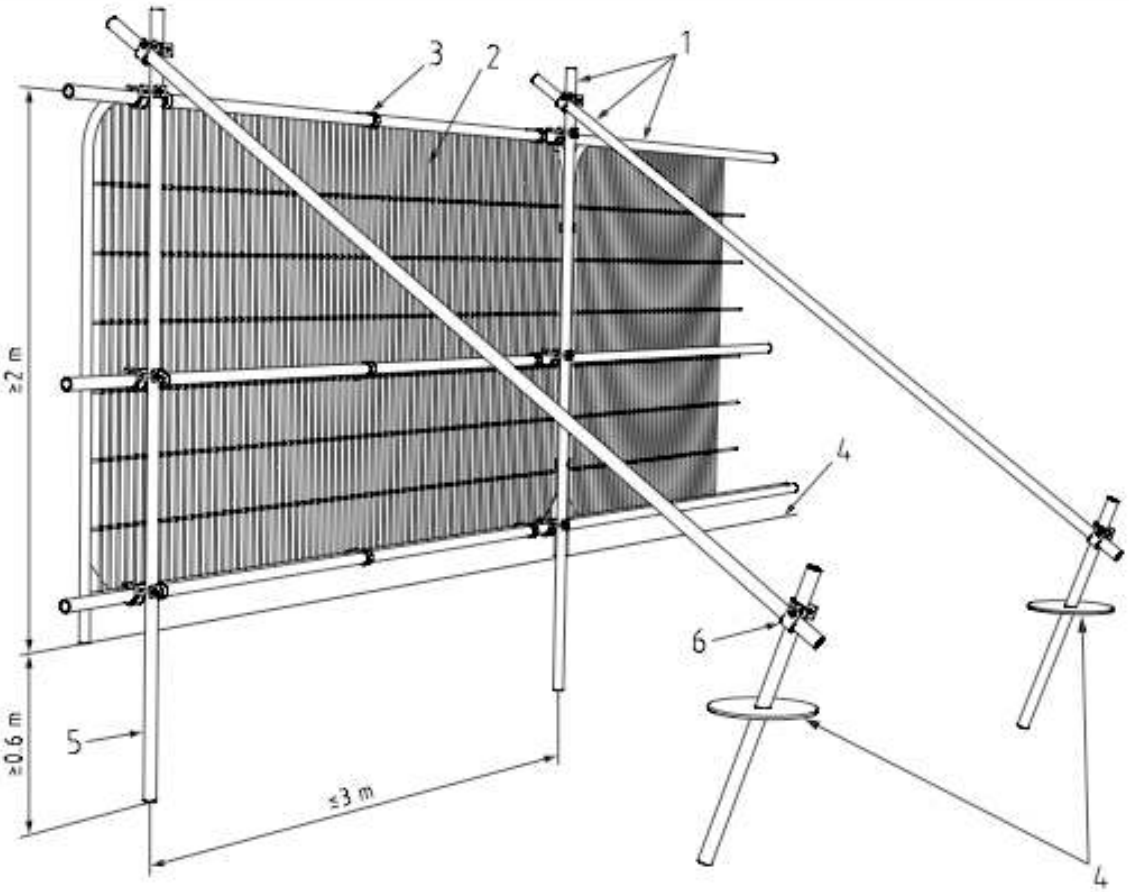

Key

1 Standard scaffold poles

2 Heavy gauge 2 m tall galvanized tube and welded mesh infill panels

3 Panels secured to uprights and cross-members with wire ties

4 Ground level

5 Uprights driven into the ground until secure (minimum depth 0.6 m)

6 Standard scaffold clamps

Appendix 6 - Protective Fencing

Tree protective fencing

Figure 3 Examples of above-ground stabilizing systems

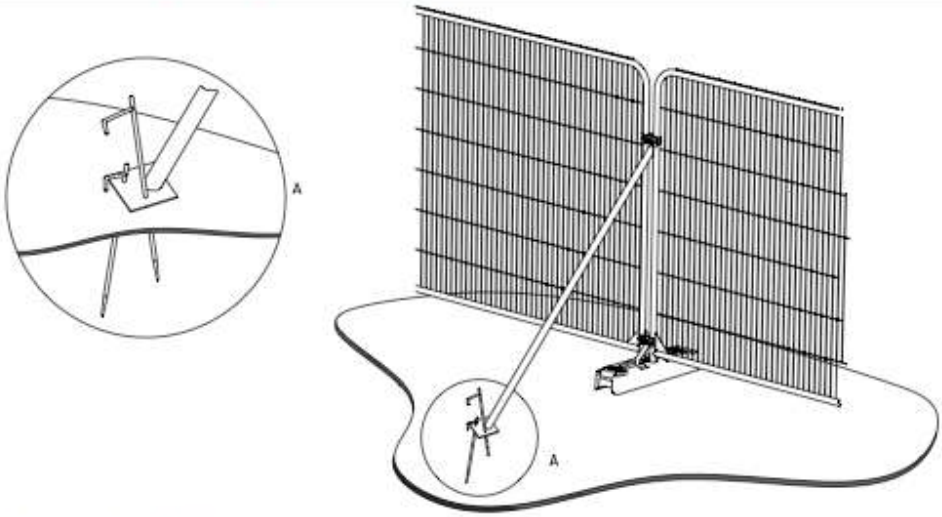

a) Stabilizer strut with base plate secured with ground pins

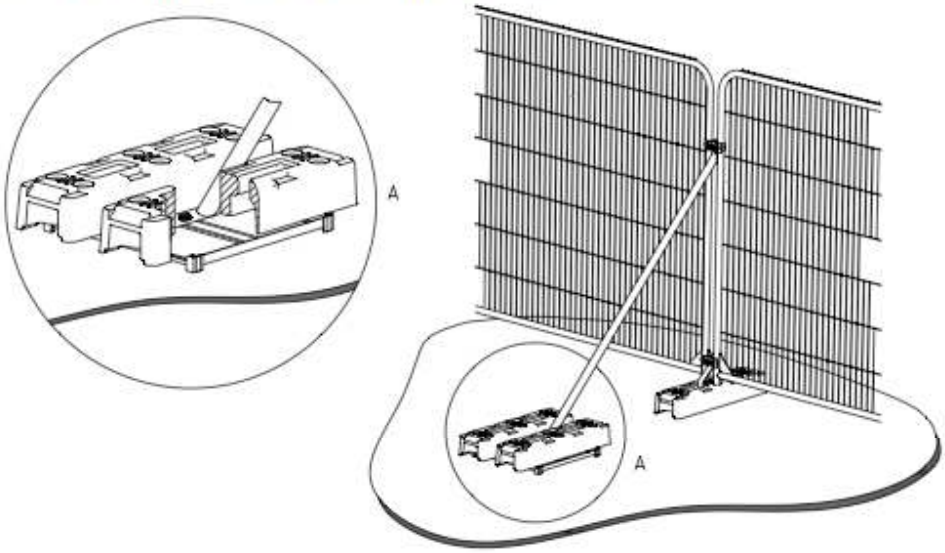

b) Stabilizer strut mounted on block tray

Appendix 7 - Signage

TREE PROTECTION AREA

KEEP OUT!

ANY INCURSION INTO THE PROTECTED AREA MUST BE WITH THE AGREEMENT OF THE LOCAL AUTHORITY OR ARBORICULTURAL CONSULTANT