This drawing is the property of CRITTALL WINDOWS Ltd. It is a confidential document and must not be copied, used or its contents divulged without prior written consent.

OUTSIDE ELEVATIONS - DO NOT SCALE

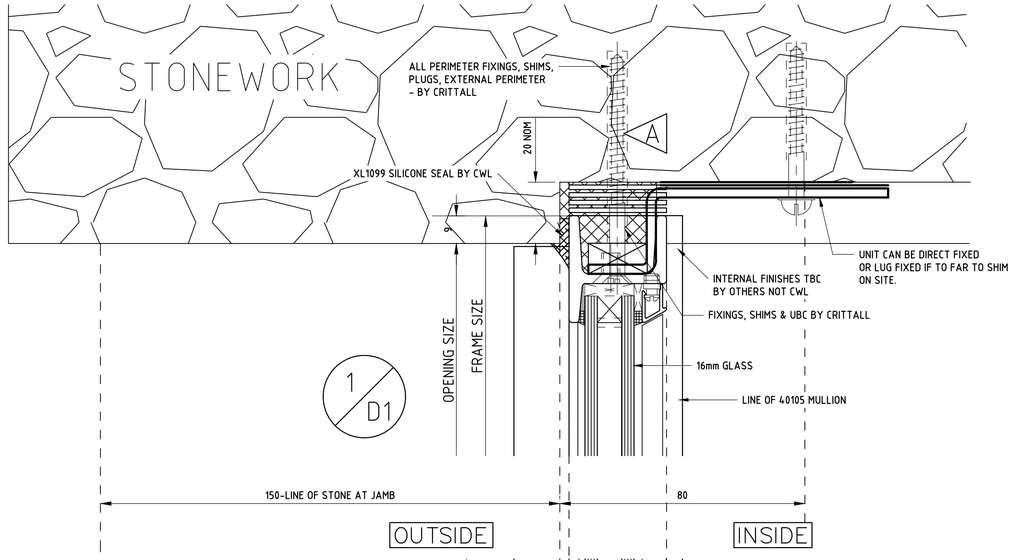

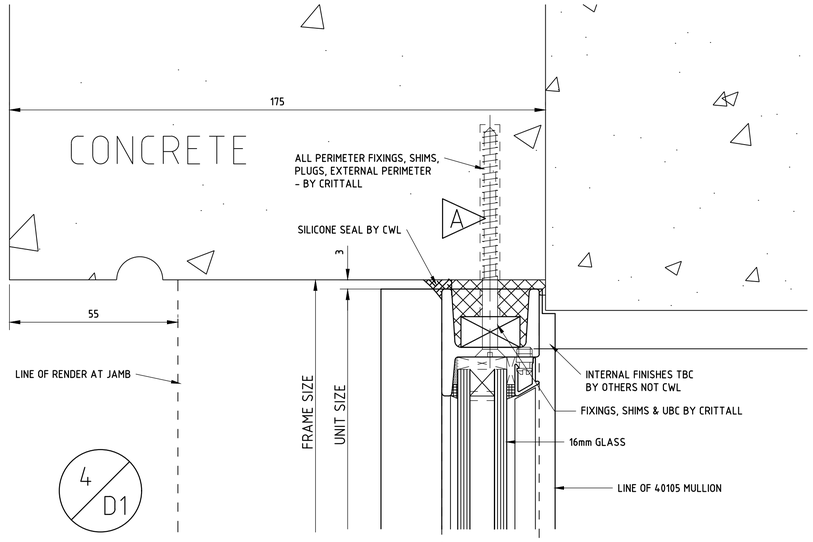

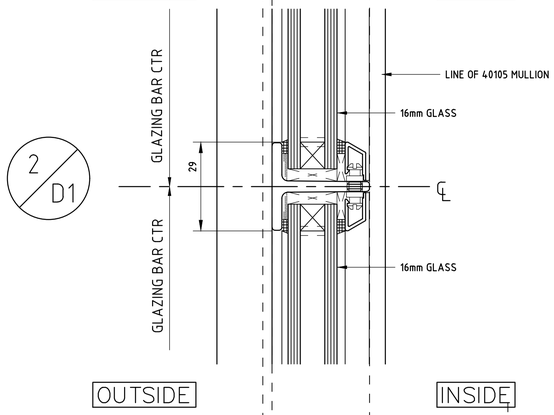

CONTRACTOR NOTE

ANY INTERNAL FINISHES TO BE APPLIED AFTER WINDOW INSTALLATION

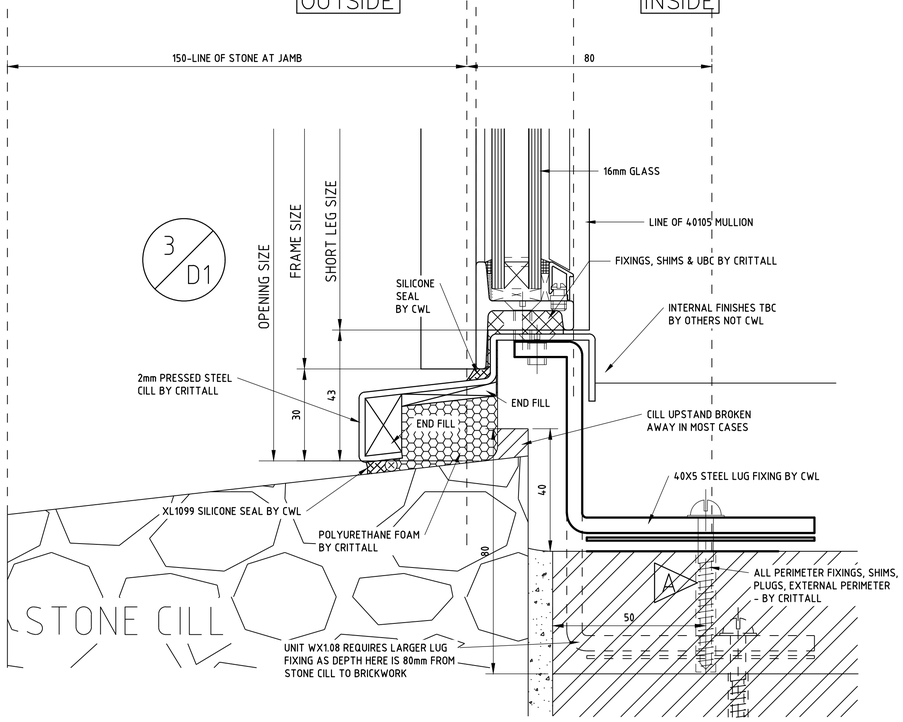

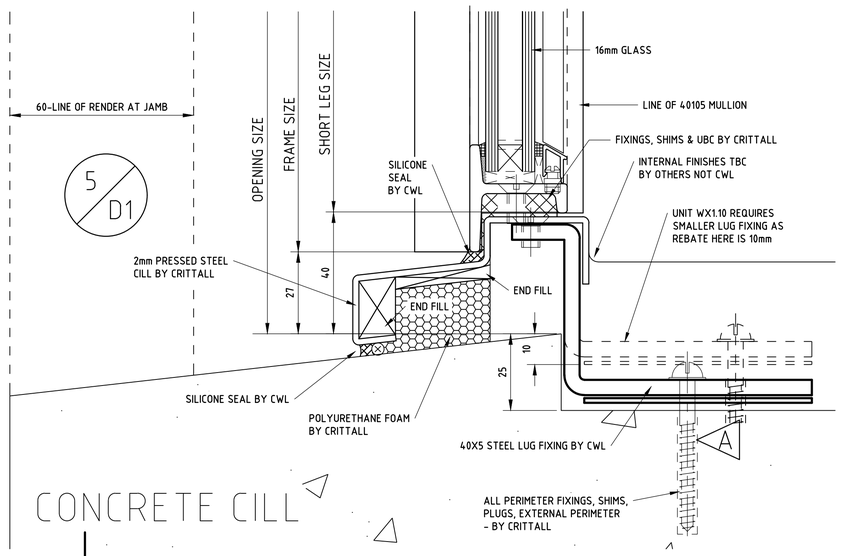

© CRITTALL WINDOWS LTD. 2018

SPECIFICATION

CONSTRUCTION ISSUE

✱ DETAILER'S SIGNATURE AUTHORISES RELEASE FOR PRODUCTION/INSTALLATION

LEGEND:
(DELETE AS APPLICABLE)

- EXTERNAL POINTING BY CRITTALL/OTHERS
- A — PLUGS BY CRITTALL; HOLES BY GENERAL CONTRACTOR/CRITTALL
- B — POLYURETHANE FOAM INFILL BY CRITTALL
- C — POLYURETHANE FOAM/WATERPROOF INFILL NOT WITHIN CRITTALL SCOPE OF WORKS
- D — BRICKWORK ETC TO BE FLUSH-POINTED 12mm FORWARD OF EXTERNAL FACE OF WINDOWS
- DETAIL NUMBER / DRAWING NUMBER

TOLERANCES: OUR PRICES ARE BASED UPON OPENINGS FOR WINDOWS BEING SUFFICIENTLY ACCURATE IN SIZE, POSITION, SQUARENESS AND STRAIGHTNESS TO ENABLE WINDOWS TO BE FIXED WITH A MAXIMUM 6mm CLEARANCE BETWEEN WINDOWS, FIXING BRACKETS AND STRUCTURE

BI-METALLIC CORROSION: THE CONTENT OF THESE DRAWINGS HAVE TAKEN INTO CONSIDERATION BI-METALLIC CORROSION (GALVANIC ACTION) EFFECTS FOR THE MATERIALS USED THEREIN, BY FOLLOWING THE ADVICE GIVEN IN PD 6484:1979, PUBLISHED BY BSI

VARIATIONS TO CONTRACT: FINAL APPROVAL OF THIS DRAWING BY THE SPECIFIER WILL BE DEEMED AS ACCEPTANCE OF PAYMENT LIABILITY FOR ANY TIME AND/OR COST VARIATION TO THE CONTRACT

THIS DRAWING IS THE PROPERTY OF CRITTALL WINDOWS LIMITED. IT IS A CONFIDENTIAL DOCUMENT AND MUST NOT BE COPIED, USED OR ITS CONTENTS DIVULGED WITHOUT PRIOR WRITTEN CONSENT © CRITTALL WINDOWS LTD 2018

REVISION	REVISION TO ESTIMATE	BY	DATE
B	UPDATED TO CONSTRUCTION ISSUE	BC	08.01.20
A	CONTRACTOR NOTE ADDED	BC	06.01.20
REVISION	REVISION TO DRAWING	BY	DATE

CRITTALL®

CRITTALL® IS A REGISTERED TRADE MARK OF CRITTALL WINDOWS LTD

TITLE	THE GLOBE STOCKTON ON TEES TS18 1PL
CONTRACTOR	WILLMOTT DIXON CONSTRUCTION LTD TEAM VALLEY TRADING ESTATE, GATESHEAD NE11, 0PZ
ARCHITECT	SPACE ARCHITECTS NEWCASTLE UPON TYNE NE7 7LX
DRAWN BEN CAIRA	DATE 27.11.19
CHECKED	SCALE AT A1 1:1
DRAWING NUMBER	SHEET NUMBER / ITEMS
9660G2B	D1
REVISION NUMBER	A B
DDO ISSUE NUMBER	
DETAILED BY	DATE / DIST
FINISH	