Culvert Design

West Link Road, Countesswells

October 2018

Issue 1

FAIRHURST

FAIRHURST

CONTROL SHEET

CLIENT: Countesswells Development Limited

PROJECT TITLE: East Link Road, Countesswells

REPORT TITLE: Culvert Design

PROJECT REFERENCE: 112614

DOCUMENT NUMBER: 112614-WLCD

STATUS: Final

Issue & Approval Schedule		Name	Signature	Date
	Prepared by	M Campbell	[redacted]	23/10/18
	Checked by	Z Harper		23/10/18
	Approved by	L Morrison		23/10/18

Revision Record	Rev.	Date	Status	Description	Signature	
	2				By	
					Check	
					Approve	
	3				By	
					Check	
					Approve	

This document has been prepared in accordance with procedure OP/P02 of the *Fairhurst Quality and Environmental Management System*

This document has been prepared in accordance with the instructions of the client, Countesswells Development Limited, for the client's sole and specific use. Any other persons who use any information contained herein do so at their own risk.

Contents

The Development Proposal 1
Catchment Flows 1
Proposed Culvert Design 1
Appendix A – Drawings 3
Appendix B – Calculations 4

The Development Proposal

Countesswells Development Ltd as part of their Countesswells development are proposing to link the development with the A944 road which is south of Kingswells. The west link road is one of the link roads which is proposed. This particular link road crosses an unnamed watercourse at OS grid reference NJ 86956 05394 and as a result the watercourse will require culverting.

This document pertains only to the west link road culvert and provides evidence of how the culvert was sized in order to convey the 1 in 200 year flows as required by the local authority and SEPA.

For details of the site location, refer to drawing 112614/0006 contained within Appendix A of this report.

Catchment Flows

In order to appropriately size a culvert to convey the 1 in 200 flows of the unnamed watercourse, it is necessary to assess the contributing catchment area serving it.

Using a combination of a detailed topographical survey of the development site, along with LIDAR topographical data and ordnance survey mapping, it was possible to calculate the contributing catchment area to this particular watercourse upstream of the proposed culvert. The catchment area in this instance was found to be circa 22.95ha – see drawing 112614/sk2990 for details of the catchment area.

The inflows associated with this catchment have thereafter been calculated using the method set out in the 'Institute of Hydrology Report 124 – Flood Estimation for Small Catchments'.

The results are summarised below, however, full calculations can be found in Appendix B.

Return Period	Peak Flow (l/s)
1 in 10 year	73.40
1 in 50 year	107.31
1 in 100 year	125.54
1 in 200 year	**142.24**

Table 1- Culvert Inflows

Proposed Culvert Design

The selected 600mm pipe culvert must be able to accommodate the 1 in 200 year flows of the watercourse. To ensure the pipe has capacity a check can be carried out on the proposed pipe size at the required gradient.

With reference to the guidance provided in the 'Tables for the Hydraulic Design of Pipes, Sewers and Channels' by HR Wallingford & D.I.H Barr, the flows noted within the table below can be accommodated within a 600mm diameter culvert. (For the purpose of this exercise it has been assumed that the culvert will be in 'normal' working condition, as such a roughness factor of 0.15 has been used)

Gradient of Culvert	Peak Flow Capacity Available (l/s)
1 in 27.8	1518.8
1 in 28.1	**1510.7**
1 in 29.4	1475.6

Table 2 - Pipe Culvert Capacity

Based on the above tabulated peak flow velocities at pipe gradients of 1 in 27.8 and 1 in 29.4, the capacity of the proposed 600mm pipe culvert was calculated through interpolation at the required proposed gradient of 1 in 28.1. The available capacity of the pipe is noted at 1510.7l/s compared with the 1 in 200 year inflow of 142.24l/s, as such, it can be said that the pipe has more than enough capacity.

See Appendix A – drawing 112614/6010 for details of the 600mm culvert section.

Appendix A – Drawings

- 112614/0005 Location Plan
- 112614/sk2989 Extent of Watercourse Catchment
- 112614/6001 Culvert Layout and Details

Do not scale from this drawing.

SAFETY HEALTH AND ENVIRONMENTAL INFORMATION

IN ADDITION TO THE HAZARD/RISKS NORMALLY ASSOCIATED WITH THE TYPES OF WORK DETAILED ON THIS DRAWING, NOTE THE FOLLOWING RISKS AND INFORMATION.

RISKS LISTED HERE ARE NOT EXHAUSTIVE. REFER TO DESIGN ASSESSMENT FORM NO.

CONSTRUCTION
EXISTING UTILITIES SERVICES – REFER TO UTILITIES RECORDS AND LOCATE SERVICES ON SITE.

DEMOLITION
NOT APPLICABLE.

FOR INFORMATION RELATING TO USE, CLEANING AND MAINTENANCE SEE THE HEALTH AND SAFETY FILE

IT IS ASSUMED THAT ALL WORKS WILL BE CARRIED OUT BY A COMPETENT CONTRACTOR WORKING, WHERE APPROPRIATE, TO AN APPROVED METHOD STATEMENT.

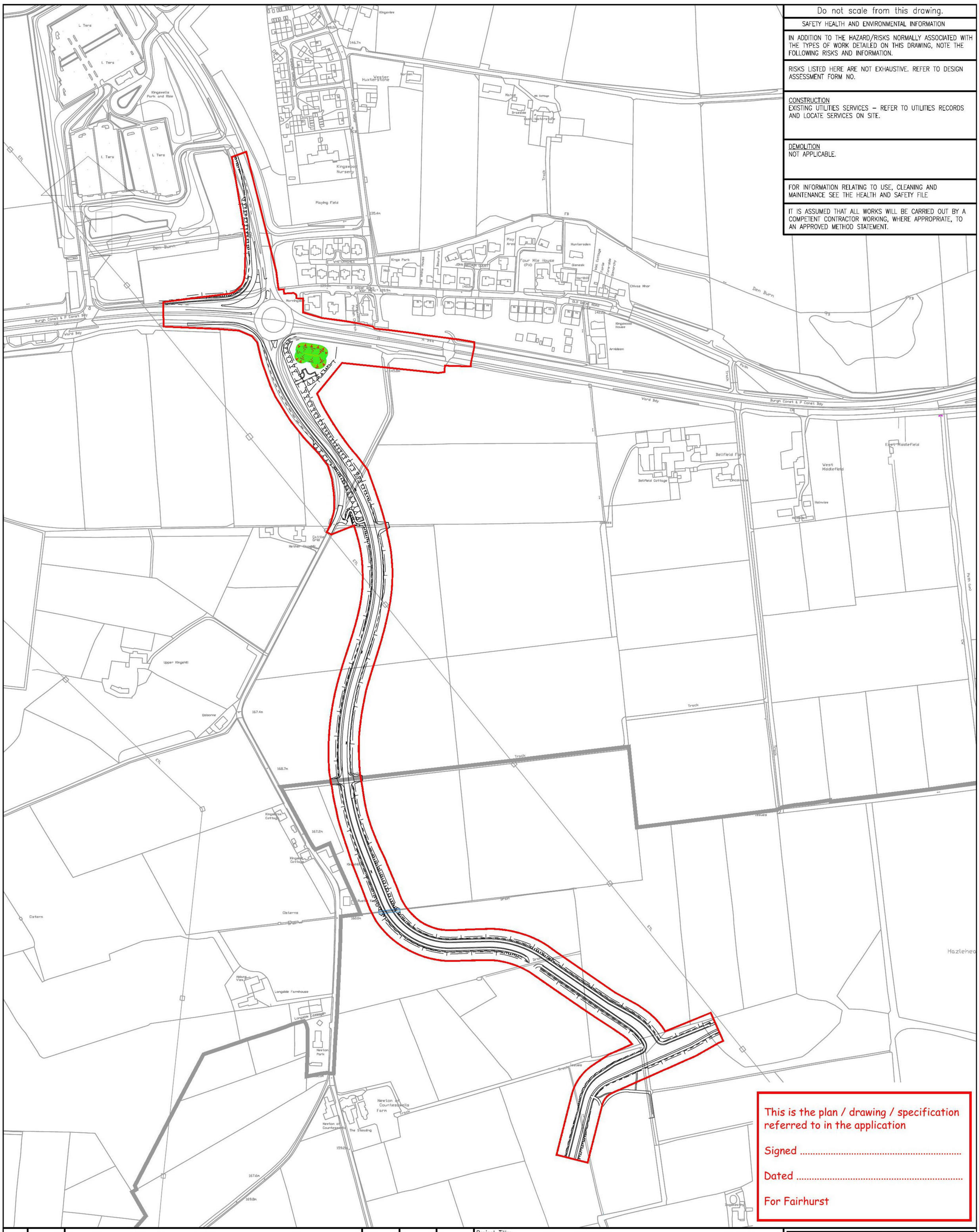

This is the plan / drawing / specification referred to in the application

Signed .....

Dated .....

For Fairhurst

Rev.	Date	Description	Drawn	Checked	Approved

Project Title:
PROPOSED MIXED COMMUNITY DEVELOPMENT AT COUNTESSWELLS, ABERDEEN: LINK ACCESS ROADS

Drawing Title:
WEST LINK TO KINGSWELLS ROUNDABOUT LOCATION PLAN

FAIRHURST

88 Queens Road,
ABERDEEN, AB15 4YQ
Tel: 01224 321 222 Fax: 01224 323 201

Scale at A3:	Status:	
1:5000	For Approval	
Drawn: NS	Checked: CF	Approved: ZLH
Date: 03/07/17	Date: 03/07/17	Date: 03/07/17
Drawing No.: 112614/0005		Revision: –

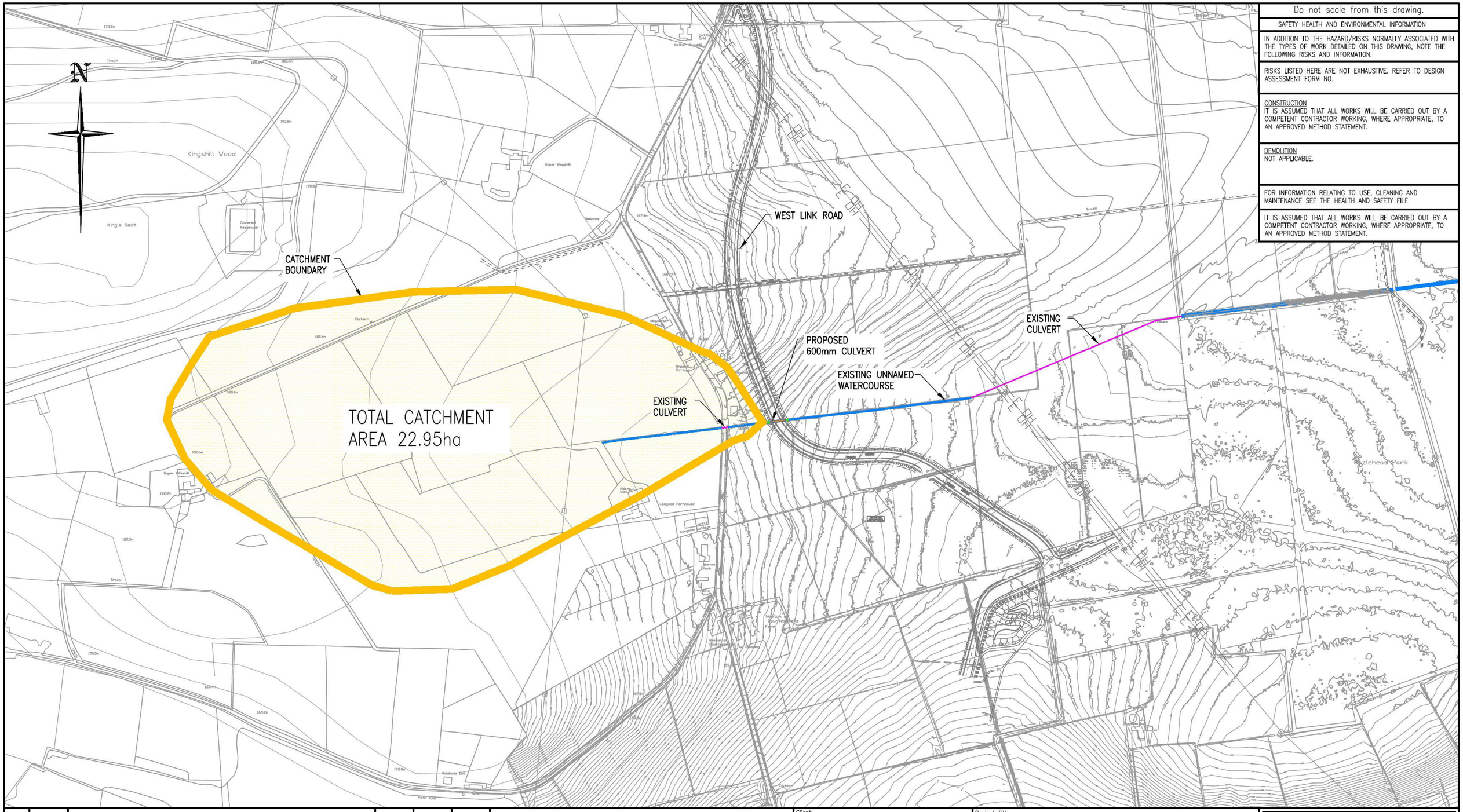

Do not scale from this drawing.

SAFETY HEALTH AND ENVIRONMENTAL INFORMATION

IN ADDITION TO THE HAZARD/RISKS NORMALLY ASSOCIATED WITH THE TYPES OF WORK DETAILED ON THIS DRAWING, NOTE THE FOLLOWING RISKS AND INFORMATION.

RISKS LISTED HERE ARE NOT EXHAUSTIVE. REFER TO DESIGN ASSESSMENT FORM NO.

CONSTRUCTION
IT IS ASSUMED THAT ALL WORKS WILL BE CARRIED OUT BY A COMPETENT CONTRACTOR WORKING, WHERE APPROPRIATE, TO AN APPROVED METHOD STATEMENT.

DEMOLITION
NOT APPLICABLE.

FOR INFORMATION RELATING TO USE, CLEANING AND MAINTENANCE SEE THE HEALTH AND SAFETY FILE

IT IS ASSUMED THAT ALL WORKS WILL BE CARRIED OUT BY A COMPETENT CONTRACTOR WORKING, WHERE APPROPRIATE, TO AN APPROVED METHOD STATEMENT.

Rev.	Date	Description	Drawn	Checked	Approved

This is the plan / drawing / specification referred to in the application

Signed .....

Dated .....

For Fairhurst

Client:

Countesswells

Project Title:
PROPOSED MIXED COMMUNITY DEVELOPMENT AT COUNTESSWELLS, ABERDEEN: LINK ACCESS ROADS

Drawing Title:
EXTENT OF WATERCOURSE CATCHMENT UPSTREAM OF PROPOSED 600MM CULVERT

FAIRHURST
88 Queens Road,
ABERDEEN, AB15 4YQ
Tel: 01224 321 222 Fax: 01224 323 201

Scale at A3:	Status:	
1:5000	For Approval	
Drawn: MC	Checked: ZLH	Approved: ZLH
Date: 23/10/18	Date: 23/10/18	Date: 23/10/18
Drawing No.: 112614/sk2989		Revision: –

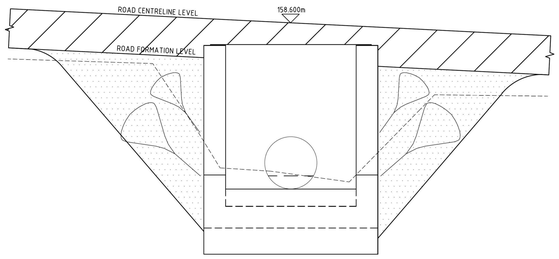

DATUM = 155.000m A.O.D							
EXISTING LEVELS	158.197	158.165	158.003	156.916	156.798	157.623	157.786
DESIGN LEVELS	158.743	158.693	158.643	158.593	158.543	158.493	
DISTANCE	877.000	878.000	879.000	880.000	881.000	882.000	

CULVERT 1 – UPSTREAM ELEVATION ON CULVERT FACE
SCALE 1:25

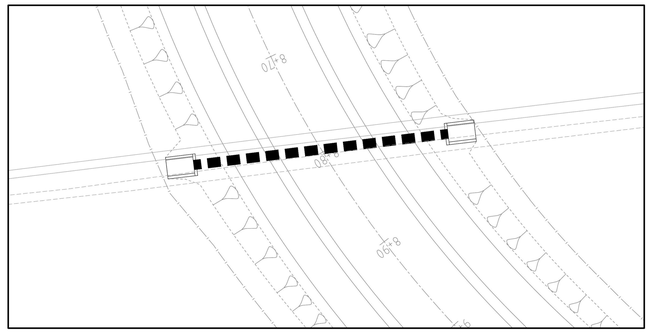

LAYOUT PLAN
SCALE 1:200

Do not scale from this drawing.

SAFETY HEALTH AND ENVIRONMENTAL INFORMATION

IN ADDITION TO THE HAZARD/RISKS NORMALLY ASSOCIATED WITH THE TYPES OF WORK DETAILED ON THIS DRAWING, NOTE THE FOLLOWING RISKS AND INFORMATION.

RISKS LISTED HERE ARE NOT EXHAUSTIVE. REFER TO DESIGN ASSESSMENT FORM NO.

CONSTRUCTION
EXISTING UTILITIES SERVICES – REFER TO UTILITIES RECORDS AND LOCATE SERVICES ON SITE.

DEMOLITION
NOT APPLICABLE

FOR INFORMATION RELATING TO USE, CLEANING AND MAINTENANCE SEE THE HEALTH AND SAFETY FILE

IT IS ASSUMED THAT ALL WORKS WILL BE CARRIED OUT BY A COMPETENT CONTRACTOR WORKING, WHERE APPROPRIATE, TO AN APPROVED METHOD STATEMENT.

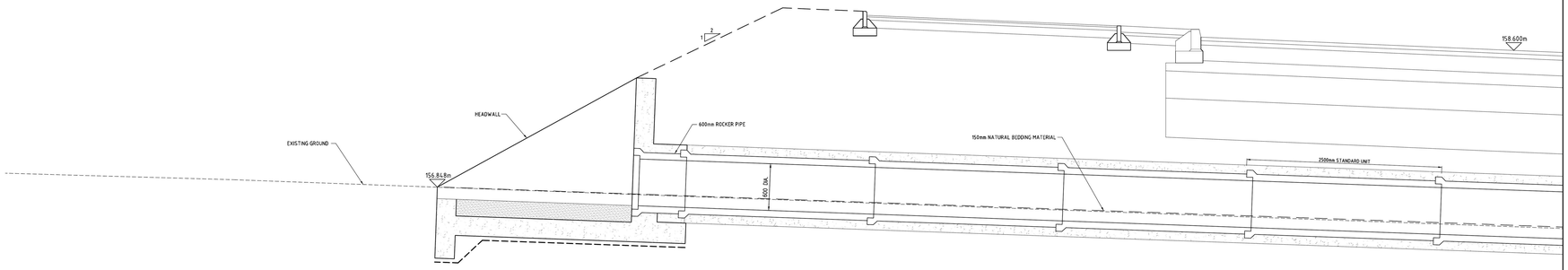

DATUM = 154.000m A.O.D																				
EXISTING LEVELS	157.026	156.998	156.969	156.940	156.903	156.867	156.830	156.793	156.757	156.720	156.683	156.647	156.610	156.573	156.536	156.500	156.463	156.426	156.390	156.353
DESIGN LEVELS											159.145	159.100 159.050 159.000			158.915	158.870 158.770				
DISTANCE							5.535				9.960					15.321				19.330

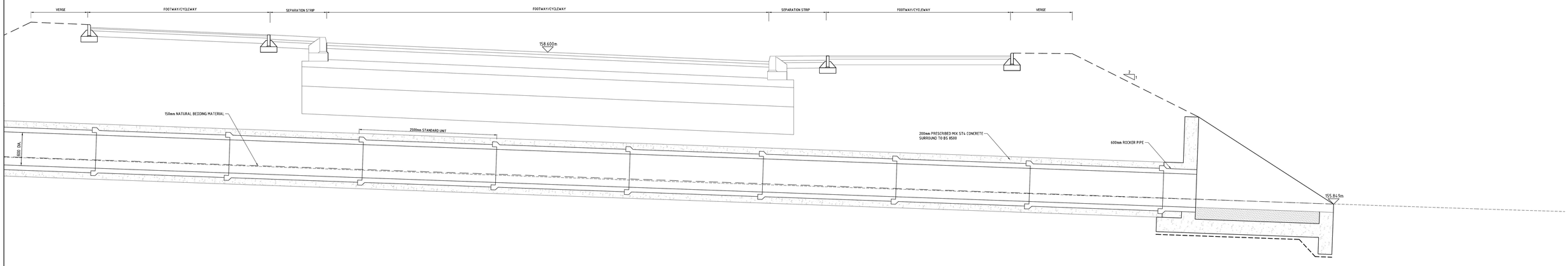

156.683	156.647	156.610	156.573	156.536	156.500	156.463	156.426	156.390	156.353	156.316	156.279	156.245	156.211	156.177	156.143	156.110	156.076	156.042	156.008	155.974	155.940	155.906	155.872	155.838	155.804	155.770	155.739	155.716
159.145	159.100 159.050 159.000			158.915	158.870 158.770								158.620 158.570	158.535				158.540 158.490 158.440	158.575									
9.960					15.321				19.330				22.339					28.840					33.577					

SECTION THROUGH CULVERT
SCALE 1:25

Rev.	Date	Description	Drawn	Checked	Aporoved
B	24/10/18	TRASH SCREEN REMOVED.	MC	DA	ZLH
A	12/09/18	BOX CULVERT REPLACED WITH PIPE.	MC	ZLH	ZLH

This is the plan / drawing / specification referred to in the application
Signed .....
Dated .....
For Fairhurst

Client: Countesswells

Project Title:
PROPOSED MIXED COMMUNITY DEVELOPMENT AT COUNTESSWELLS, ABERDEEN: LINK ACCESS ROADS

Drawing Title:
WEST LINK TO KINGSWELLS ROUNDABOUT
CULVERT LAYOUT AND DETAILS

FAIRHURST
80 Queens Road,
ABERDEEN, AB15 4YQ
Tel: 01224 331 222 Fax: 01224 323 201

Scale at A0:	Status:	
AS SHOWN	For Approval	
Drawn: NS	Checked: CF	Approved: ZLH
Date: 03/07/17	Date: 03/07/17	Date: 03/07/17
Drawing No.: 112614/6001		Revision: B

Appendix B – Calculations

- Catchment Area Inflows Calculations to IH124

FAIRHURST					CALCULATION SHEET
CONSULTING STRUCTURAL AND CIVIL ENGINEERS	**PROJECT**	**JOB No.**	112614	**Calculated by**	MC
West Link Road		**SHEET No.**	1		
Countesswells				**Checked by**	ZLH
Aberdeen		**DATE**	20/09/18		
Flood Estimation for Small Catchments					

To establish Winter Rain Acceptance Potential (WRAP) for site from site investigation results

From FSR Clause 4

A Drainage group:

B Depth to impermeable layers:

C Permeability group:

D Slope:

From Table 4.5 of FSR a WRAP of **2** is obtained.

Establish Pre-development Peak Surface Water Run-off for 50 hectares

The following formula is used to calculate the peak flow in m^3/s ;-

$Q_{BARrural(50ha)}$ = 0.00108 x Area $^{0.89}$ x SAAR $^{1.17}$ x SOIL $^{2.17}$

where, AREA is the Gross Area in km^2 = 50.000 ha / 100 = 0.50000 km2
SAAR for Countesswells = 824
SOIL is factor for WRAP value. For WRAP of 2 , SOIL is 0.30

$Q_{BARrural(50ha)}$ = 0.00108 x 0.50000 $^{0.89}$ x 824 $^{1.17}$ x 0.30 $^{2.17}$

= 0.00108 x 0.53961 x 2580.09 x 0.07334

= 0.11028 m^3/s

= **110.28 l/s**

Gross Site Area = 22.950 ha

Peak flow from gross site area = 110.28 l/s / 50 ha x 22.950 ha = **50.62 l/s**

Apply Regional Growth Factors from Table 1(2.39) of FSSR 14

Site is in Region 1 (Fig. 2.4), therefore Factors are:

10 year event is 1.45, therefore 10 year pre-development Run-off	=	50.62	x	1.45	=	**73.40 l/s**
50 year event is 2.12, therefore 50 year pre-development Run-off	=	50.62	x	2.12	=	**107.31 l/s**
100 year event is 2.48, therefore 100 year pre-development Run-off	=	50.62	x	2.48	=	**125.54 l/s**
200 year event is 2.81, therefore 200 year pre-development Run-off	=	50.62	x	2.81	=	**142.24 l/s**

CIVIL ENGINEERING • STRUCTURAL ENGINEERING • TRANSPORTATION • ROADS & BRIDGES
PORTS & HARBOURS • GEOTECHNICAL & ENVIRONMENTAL ENGINEERING • PLANNING &
DEVELOPMENT • WATER SERVICES • HEALTH & SAFETY / CDM SERVICES

www.fairhurst.co.uk

Aberdeen
Bristol
Birmingham
Dundee
Edinburgh
Elgin
Glasgow
Huddersfield
Inverness
Leeds
London
Manchester
Newcastle upon Tyne
Sevenoaks
Sheffield
Taunton
Watford
Westhill

FAIRHURST