Structural Calculations
to
Wall Barn Farm
Newtown Lane
Belbroughton.
DY9 9UR

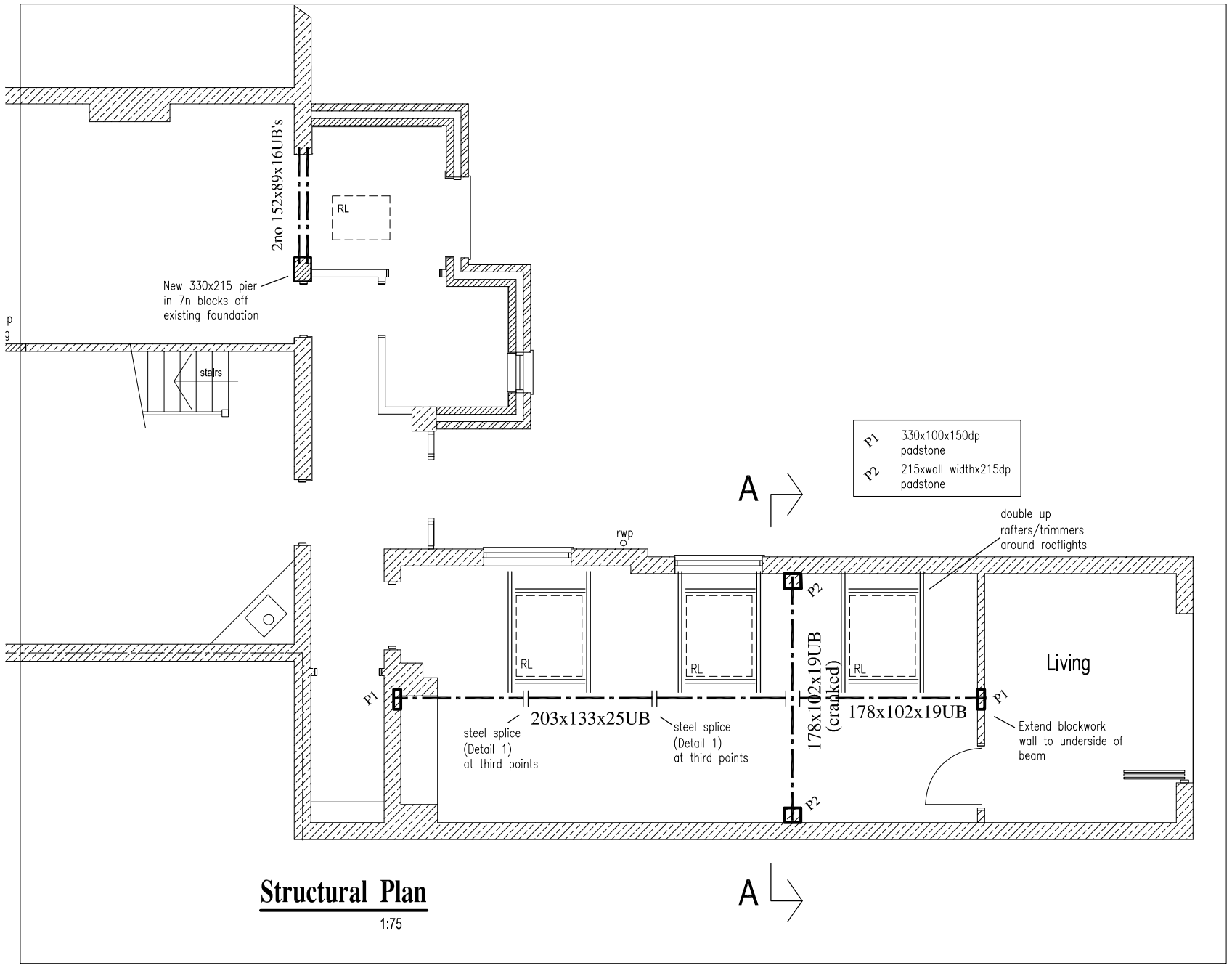

Structural Plan

1:75

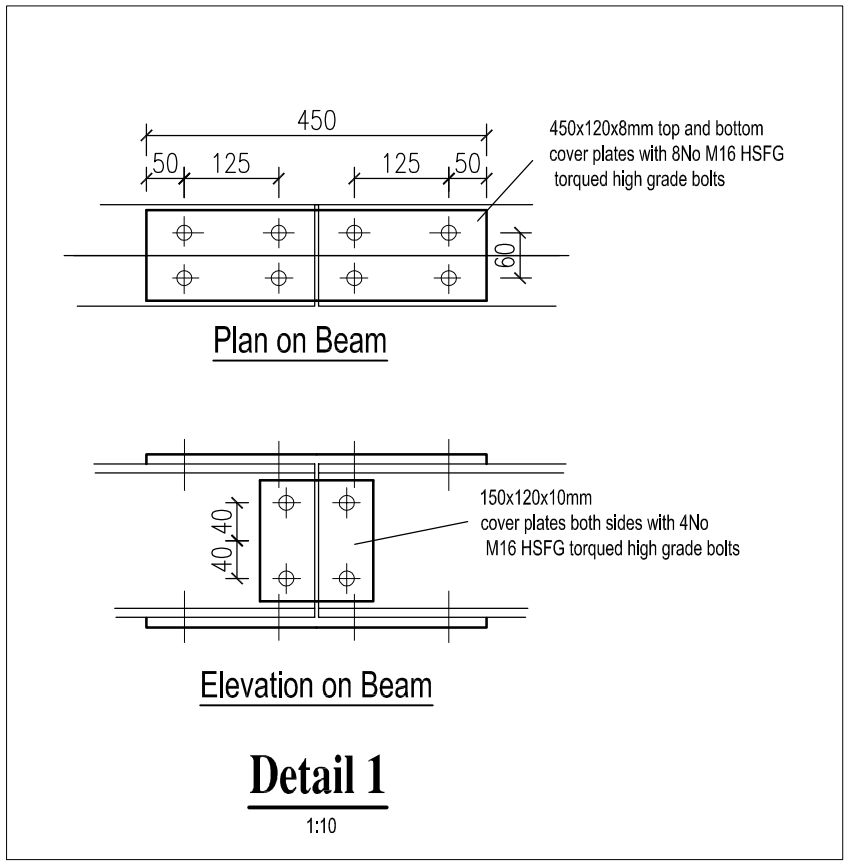

Detail 1

1:10

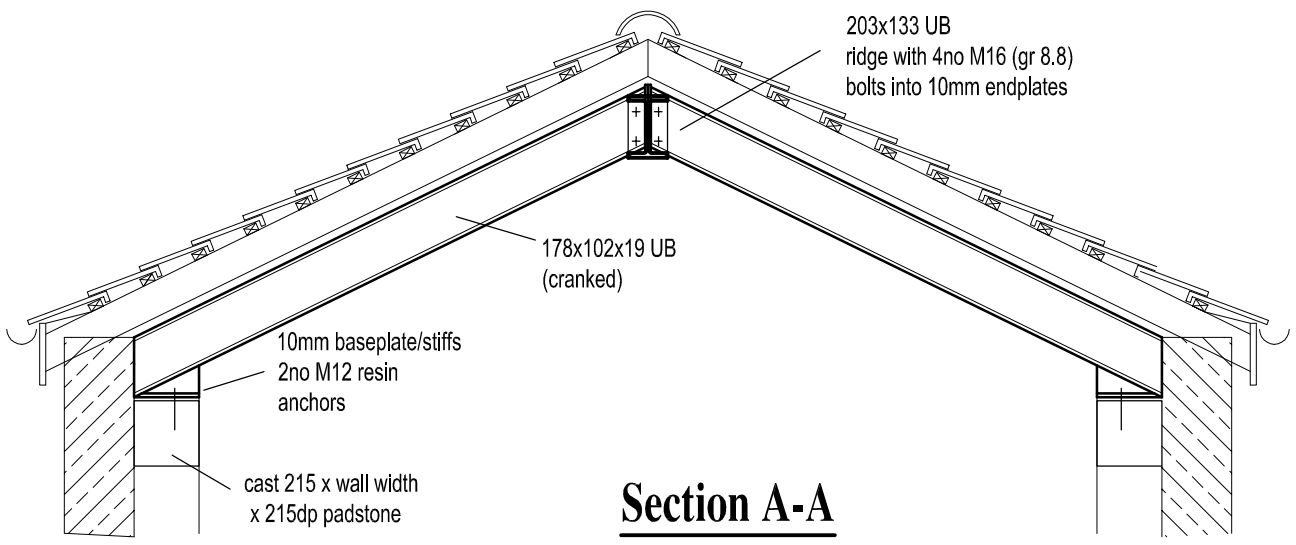

Section A-A

1:25

Location
Wall Barn Farm
Newtown Lane
Belbroughton.
DY9 9UR

Drawing Title
Structural Details

Date
Mar 2021

Scale	Size	Drg No	Rev
1:100	A3	04	

Project	Project number
Wall Barn Farm, Belbroughton	
Calcs for	**Date**
Beam 1	25 Mar 2021

Steel Beam Calculation

Beam details

203 x 133 x 25 UB S275

Beam effective span length: **5.4 metres**

Width: **133.2 mm**
Depth: **203.2 mm**
Web: **5.7 mm**
Flange: **7.8 mm**
Radius: **7.6 mm**
Mass per metre: **25.1 kg/m**

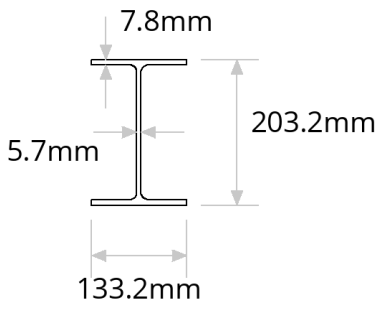

Safety factors, restraints & deflection limits

Permanent load safety factor: **1.35**
Variable load safety factor: **1.5**

Beam is fully restrained along its length: **No**
Length between lateral restraints: **5.4 metres**

Variable load deflection limit: **Span/360 = 15 mm**
Total load deflection limit: **Span/500 = 10.8 mm**

Load details

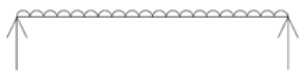

UDL 1: Sloping roof, 0° to 30°

Permanent (dead) load per square metre: **1.5 kN/m²**

Variable (live) load per square metre: **0.75 kN/m²**

Width of load perpendicular to beam, or height of load supported by beam: **1.7 metres**

Calculations

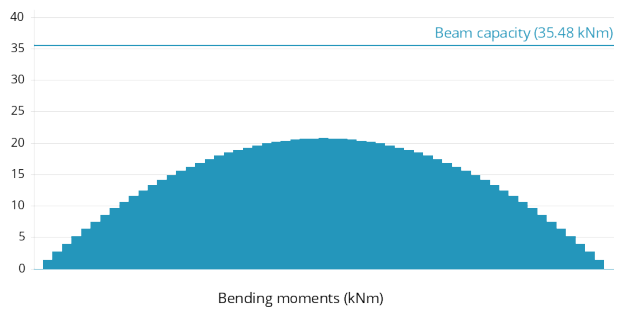

Bending moments

Mc,y = 71kNm > 20.73kNm, Therefore OK
Mc,y value from Tata Steel 'blue book' to BS EN 1993-1-1
Mb = 35.48kNm > 20.73kNm, Therefore OK
Mb value INTERPOLATED from Tata Steel 'Blue Book' to BS EN 1993-1-1
C1 value conservatively taken as 1.0

Project	Project number
Wall Barn Farm, Belbroughton	
Calcs for	Date
Beam 1	25 Mar 2021

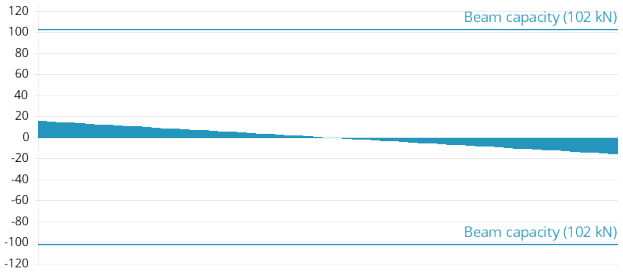

Shear forces (kN)

Shear forces

Shear capacity Vc = 204kN x 0.5 = 102kN > 15.36kN, Therefore OK

Shear Capacity, Vc from Tata Steel 'Blue Book' to BS EN 1993 -1-1

Reduction of moment resistance by high coincident shear force has been avoided by checking that the shear force is no more than 50% of the shear resistance

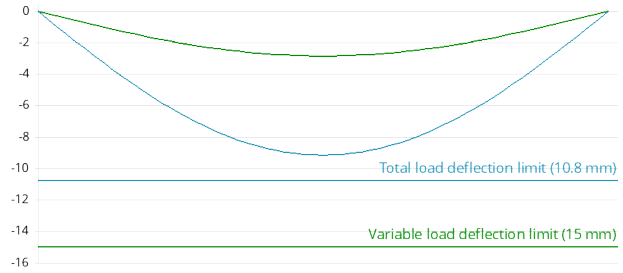

Variable load deflection (green) and total load deflection (blue) in mm

Deflection

Variable load deflection = 2.87mm < 15mm, Therefore OK

Total load deflection = 9.17mm < 10.8mm, Therefore OK

Notes

Mc,y value from Tata Steel 'Blue Book' to BS EN 1993-1-1

Mb value interpolated from Tata Steel 'Blue Book' to BS EN 1993-1-1

C1 value conservatively taken as 1.0

Shear Capacity, Vc from Tata Steel 'Blue Book' to BS EN 1993-1-1

Reduction of moment resistance by high coincident shear force has been avoided by checking that the shear force is not more than 50% of the shear resistance

Ends of beam are to be laterally restrained. Ends of beams can be laterally restrained using one of the following methods;

1) End of beam built into masonry wall.
2) End of beam fixed to a masonry wall.
3) End of beam fixed to a column or a beam.

The designer is to ensure that the proposed detail adequately ensures that the end of the beam is laterally restrained.

No allowance has been made for destabilising loads which are outside the scope of these calculations (Destabilising loads would not normally occur in a traditional masonry structure)

BOLTED COVER PLATE SPLICE CONNECTION TO BS5950-1:2000

TEDDS calculation version 1.0.02

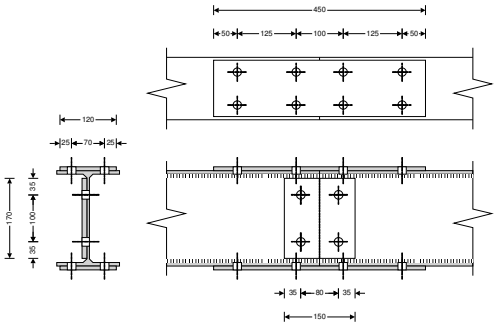

Connection loads

Design moment	M = **15** kNm
Axial force in the member (compression +ve)	N = **5** kN
Shear force in the member	V = **10** kN

Steel beam details

Beam section classification	**UB 203x133x25**
Grade of steel section	**S355**
Section bearing strength	p_{bs_s} = **550** N/mm^2

General connection details

Grade of steel plate	**S275**
Plate bearing strength	p_{bs_p} = **460** N/mm^2
Bolt classification	**M16 (Torqued High Grade HSFG)**
Hole diameter	D_h = **18** mm
Bolt slip factor	μ = **0.50**
Hole type factor	K_s = 1.0

Flange plate details – plates bolted to one side of each flange

Thickness of flange plates	t_{fp} = **8** mm
Width of flange plates	b_{fp} = **120** mm
Length of flange plates	l_{fp} = **450** mm

Flange bolting details

Rows of flange bolts on each side of joint	n_{fb_r} = **2**
Bolts per row	n_{fb_p} = **2**
Total number of flange bolts each side of joint	$n_{fb} = n_{fb\_r} \times n_{fb\_p}$ = **4**
Spacing between rows of bolts	S_f = **125** mm
Spacing between rows of bolts across joint	S_{fc} = **100** mm
Spacing at end of flange plates	S_{fe} = **50** mm
Lateral spacing between central bolts	S_{flc} = **70** mm
Lateral spacing at edge of flange plates	S_{fle} = **25** mm

Web plate details - plate bolted to one side of the web

Thickness of web plates	t_{wp} = **10** mm
Width of web plates	b_{wp} = **150** mm
Length of web plates	l_{wp} = **170** mm

Web bolting details

Rows of web bolts	n_{wb_r} = **2**
Bolts per row each side of joint	n_{wb_p} = **1**
Total number of web bolts each side of joint	$n_{wb} = n_{wb\_r} \times n_{wb\_p}$ = **2**
Spacing between rows of bolts	S_w = **100** mm
Spacing at end of web plates	S_{we} = **35** mm
Lateral spacing between central bolts	S_{wlc} = **80** mm
Lateral spacing at edge of web plates	S_{wle} = **35** mm

Step 1 - Distribution of forces in member flanges

Forces in member tension flange	$T = [M / (D_b - T_b)] – N / 2$ = **74** kN
Forces in member compression flange	$C = [M / (D_b - T_b)] + N / 2$ = **79** kN
Force in the flange	$F_f = \max(T, C)$ = **79** kN

Step 2 - Calculate distribution of forces in member flanges

Check area of flange

Design strength of section	p_{ys} = **355** N/mm^2
Minimum required effective flange area	F_f / p_{ys} = **223** mm^2
Effective net area coefficient	K_e = **1.1**
Effective flange area	$A_{ef} = \min(K_e \times [B_b – (n_{fb\_p} \times D_h)] \times T_b, B_b \times T_b)$ = **834** mm^2

PASS - Effective flange area is adequate

Check area of flange plates

Design strength of plates	p_{yp} = **275** N/mm^2
Minimum required effective flange plate area	F_f / p_{yp} = **288** mm^2
Effective flange plate area	$A_{ep} = \min(K_e \times [b_{fp} – (n_{fb\_p} \times D_h)] \times t_{fp}, b_{fp} \times t_{fp})$ = **739** mm^2

PASS - Effective flange plate area is adequate

Step 3 - Design of flange bolts

Slip resistance of the bolt per interface	$S_{fb} = 1.1 \times K_s \times \mu \times P_p$ = **67.2** kN
Bearing capacity of the bolt in the flange	$P_{bg\_s} = 1.5 \times d \times T_b \times p_{bs\_s}$ = **103.0** kN
Bearing capacity of the bolt in the plate	$P_{bg\_p} = 1.5 \times d \times t_{fp} \times p_{bs\_p}$ = **88.3** kN
Average flange bolt end distance	$S_{fe\_ave} = S_{fe} + (n_{fb\_r} - 1) \times S_f / 2$ = **113** mm
Bearing capacity limit of the bolt in the plate	$P_{bg\_p\_lim} = 0.5 \times S_{fe\_ave} \times t_{fp} \times p_{bs\_p}$ = **207.0** kN
Bolt capacity	$P_s = \min(S_{fb}, P_{bg\_s}, P_{bg\_p}, P_{bg\_p\_lim})$ = **67.2** kN
Number of bolts required	$n_{fb\_req} = F_f / P_s$ = **1.2**
Number of bolts provided	n_{fb} = **4**

PASS - Flange plate bolting is adequate

Step 4 - Design of web plates and bolts

Check web plate in shear

Shear force in web plates	V = **10** kN
Gross shear area	$A_v = n_{wp} \times l_{wp} \times t_{wp}$ = **1700** mm^2
Net shear area (allowing for bolt holes)	$A_{v\_net} = n_{wp} \times (l_{wp} – n_{wb\_r} \times D_h) \times t_{wp}$ = **1340** mm^2
Net shear area limit	$0.85 \times A_v / K_e$ = **1314** mm^2

A_{v_net} >= 0.85 × A_v / K_e - Bolt holes may be ignored in the shear area

Gross shear capacity of web plates	$p_{v\_gross} = 0.6 \times A_v \times p_{yp}$ = **281** kN
Length of block shear face	$L_v = S_{we} + (n_{wb\_r} - 1) \times S_w$ = **135** mm
Length of block tension face	$L_t = S_{wle} + (n_{wb\_p} - 1) \times S_{wl}$ = **35** mm

Block shear coefficient	$k = if(n_{wb\_p} > 1, 2.5, 0.5) = \mathbf{0.5}$
Block shear capacity of web plates	$p_{v\_block} = 0.6 \times p_{yp} \times t_{wp} \times n_{wp} \times [L_v + K_e \times (L_t - k \times D_h)] = \mathbf{270}$ kN
Shear capacity of web plates	$p_v = \min(p_{v\_gross}, p_{v\_block}) = \mathbf{270}$ kN

PASS - Effective web plate area is adequate in shear

Check web plate in bending

Second moment of area of web plate	$I = (t_{wp} \times l_{wp}^3 / 12) - (n_{wb\_r} \times t_{wp} \times D_h^3 / 12) - (t_{wp} \times D_h \times K \times S_w^2)$
	$I = \mathbf{3184447}$ mm^4
Distance from joint to centroid of bolt group	$a = [((n_{wb\_p} - 1) \times S_{wl}) + S_{wlc}] / 2 = \mathbf{40}$ mm
Moment in web plate	$M_{wp} = V \times a = \mathbf{0.4}$ kNm
Moment capacity of web plates	$M_{cap} = p_{yp} \times n_{wp} \times I / (l_{wp} / 2) = \mathbf{10.3}$ kNm

PASS - Effective web plate area is adequate in bending

Check web plate bolts

Elastic section modulus of bolt group	$Z_b = n_{wb\_r} \times (n_{wb\_r} + 1) \times S_w / 6 = \mathbf{100}$ mm
Force on bolt due to moment	$F_m = V \times a / Z_b = \mathbf{4.0}$ kN
Force on bolt due to direct shear	$F_v = V / n_{wb\_r} = \mathbf{5.0}$ kN
Resultant bolt load	$F_r = \sqrt{(F_m^2 + F_v^2)} = \mathbf{6.4}$ kN
Angle of the resultant bolt load	$\theta = atan(F_m / F_v) = \mathbf{38.7}$ deg
Minimum edge distance	$e_r = \min(S_{we} / \cos(\theta), S_{wle} / \cos(90 - \theta)) = \mathbf{45}$ mm
Edge distance factor for web plate bearing	$K_{edge} = \min(e_r / (3 \times d), 1) = \mathbf{0.9}$
Slip resistance of the bolt per interface	$S_{fb} = 1.1 \times K_s \times \mu \times P_p = \mathbf{67.2}$ kN
Bearing capacity of the bolt in the web	$P_{bg\_s} = 1.5 \times d \times t_b \times p_{bs\_s} = \mathbf{75.2}$ kN
Bearing capacity of the bolt in the plate	$P_{bg\_p} = 1.5 \times K_{edge} \times d \times t_{wp} \times n_{wp} \times p_{bs\_p} = \mathbf{103.1}$ kN
Bolt capacity	$P_s = \min(n_{wp} \times S_{fb}, P_{bg\_s}, P_{bg\_p}) = \mathbf{67.2}$ kN

PASS - Web plate bolting is adequate

Connection summary

Beam classification	**UB 203x133x25**
Bolt classification	**M16 (Torqued High Grade HSFG)**
Flange plates	**450 mm x 120 mm x 8 mm to the outside of each flange**
Flange bolting	**8 No. total per flange - 2 No. rows of 2 No. bolts on each side of the joint**
Web plates	**170 mm x 150 mm x 10 mm on one side of the web only**
Web bolting	**4 No. total - 2 No. rows of 1 No. bolts on each side of the joint**