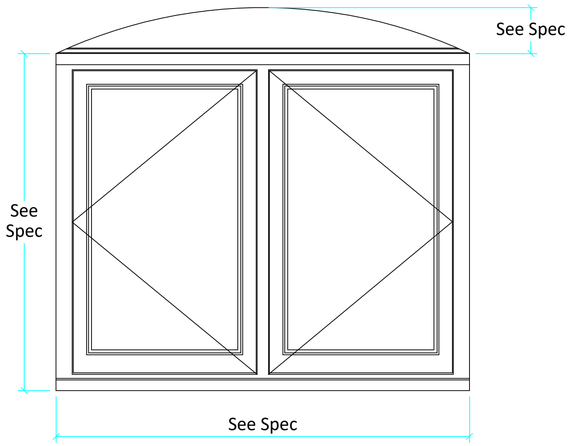

Window is viewed from outside

Spec:

Main Bedroom Front	:	1165mm wide	x	1130mm high	145mm head board Quadrant to outside jambs only Clear Annealed Glazing Both lights open
Main Bedroom Rear	:	975mm wide	x	965mm high	Clear Annealed Glazing Both lights open
Spare Bedroom Rear	:	1170mm wide	x	1195mm high	Clear Annealed Glazing Both lights open

Notes:

All ornaments and breakable items are to be removed from around the windows and working areas before we come to site
No work has been allowed to the structure of the building
Any unforeseen work will be listed and billed at day rates

Site:

Check the size of the window
Remove the existing window
Cut back the plaster and the window board
Fit the new window, screw and foam in position
Seal the frame with a clear fix-all
Clean the window and direct surrounding area
Show the customer the window and explain how it operates
Ask the customer to sign the delivery ticket

Workshop:

The window is to be manufactured in Accoya

The frame is fitted with two sets of Aquamac weather seals

The opening lights are hung on 3” brassed bearing butt hinges and held closed with a locking fasteners (Kirkpatrick 1181 NVL) and a stay per light (Kirkpatrick 1180). The ironmongery is black iron curly tail. The stays are fitted the "NEW way"

The opening lights are glazed with 24mm clear annealed Pilkington KS argon filled double glazing with grey warm edge spacer bar. The glass is glazed on 2mm black security tape and a timber bead on the outside. All units are factory glazed

The frame joggles will be removed before decoration

The windows are primed in Teknos white paint. The windows are then given two top coats. See list below for the colours

Inside of frame	-	Satin White
Outside of frame	-	Alnwick green
Opening lights	-	RAL7032 pebble grey

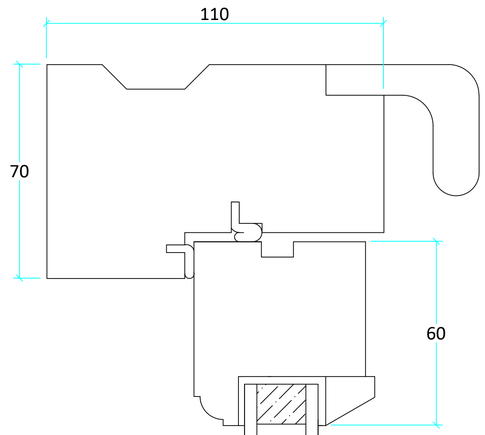

Head Detail

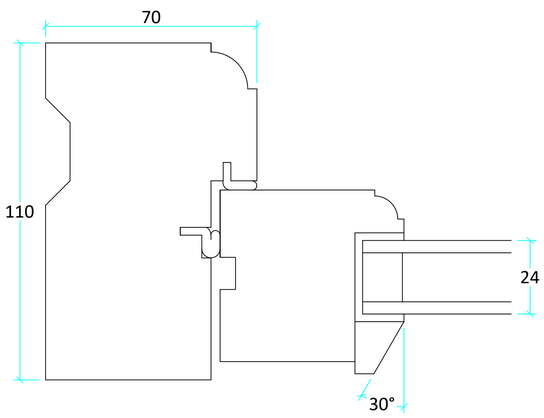

Jambs are to have a 16mm quadrant mould, painted the same colour as the frame

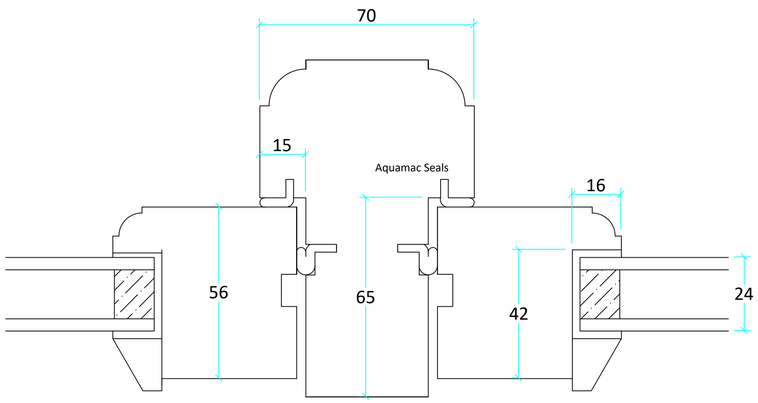

Mullion Detail

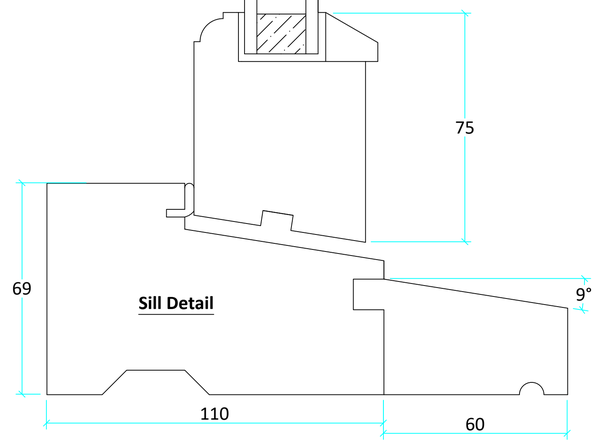

Sill Detail

DRAWING REFERENCE

XXX XXX

ALL DRAWINGS ARE TO BE CROSS REFERENCED

ANY DISCREPANCIES TO BE REPORTED

Rev	Date	Description	By
A	06.06.14	x issue	RJ

PROJECT:

Mr G Jones

DRAWING TITLE:

Windows

DATE:	SCALE:	PAPER SIZE:
20/05/21	1:1 & 1:10	A1
DRAWING REF:	REV:	BY:
J/200521/1	-	ah

AR MANLEY
Somerwood, Rodington,
Shrewsbury, Shropshire
SY4 4RF

01952 770 278

www.armanley.co.uk
sales@armanley.co.uk

arm-global-logo.png