TIMBER BOX SASH
TO MATCH EXISTING
PAINTED WHITE.
SLIM HERITAGE DOUBLE
GLAZING 12MM THICK,
4MM OUTER PLUS INNER
GLASS WITH 4MM CAVITY.

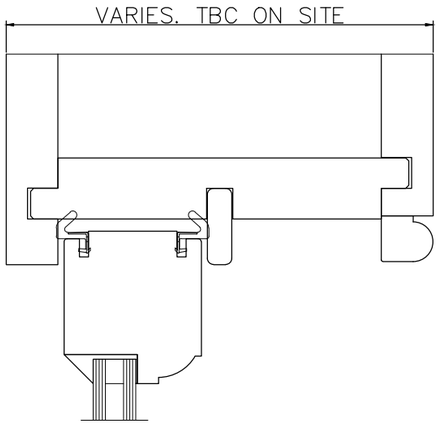

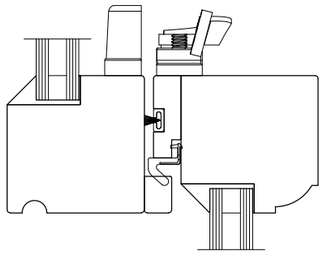

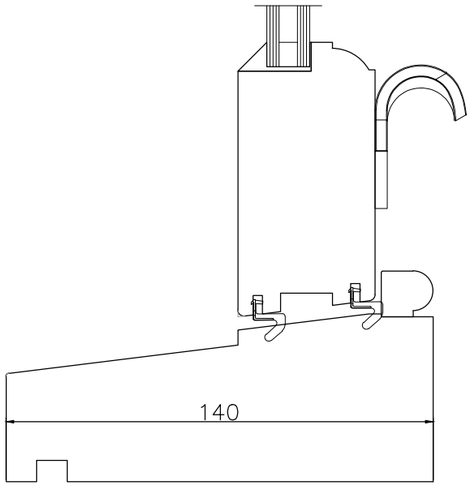

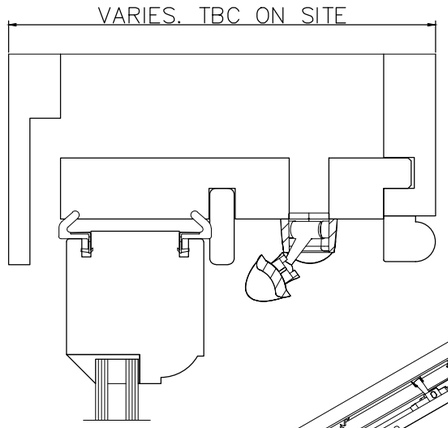

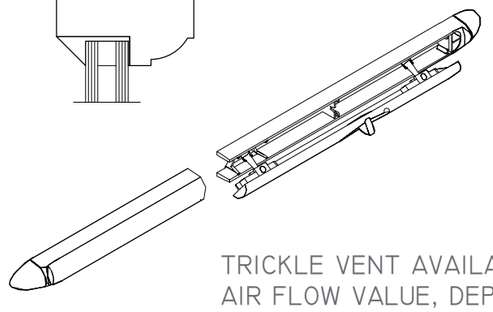

TRICKLE VENT AVAILABLE IN DIFFERENT
AIR FLOW VALUE, DEPENDING ON THE
WINDOW WIDTH:

* - 1700 MM² EA

* - 4400 MM² EA

116 PROPOSED TYPICAL WINDOW DETAILS

REV	DATE	DESCRIPTION
-	-	-

NOTES:

ECHLIN
2ND FLOOR,
NEWCOMBE HOUSE
45 NOTTING HILL GATE
LONDON W11 3LQ
+44 (0) 20 7349 9610
ECHLINLONDON.COM

DO NOT SCALE FROM THIS DRAWING. ALL DIMENSIONS TO BE CHECKED ON SITE PRIOR TO COMMENCEMENT OF ANY WORKS OR PREPARATION OF SHOP DRAWINGS. THE SIZING AND DIMENSIONS OF ALL STRUCTURAL AND SERVICE ELEMENTS MUST ALWAYS BE CHECKED AGAINST THE RELEVANT ENGINEERS DRAWINGS. THIS DRAWING IS TO BE READ IN CONJUNCTION WITH ALL OTHER CONSULTANTS INFORMATION. IF THIS DRAWING HAS BEEN TRANSMITTED ELECTRONICALLY, THE ABOVE STATEMENTS ALSO APPLY. © ECHLIN 2015

PROJECT
43 NOTTINGHAM PLACE, LONDON, W1U 5LU

DRAWING TITLE
PROPOSED TYPICAL WINDOW DETAILS

STATUS
PLANNING APPLICATION

SCALE	JOB NUMBER	DRAWN BY	CHECKED
1:2 @A3	2117	WB	SC

DRAWING No	DATE	REVISION
2117/PL/116	21.05.2021	-