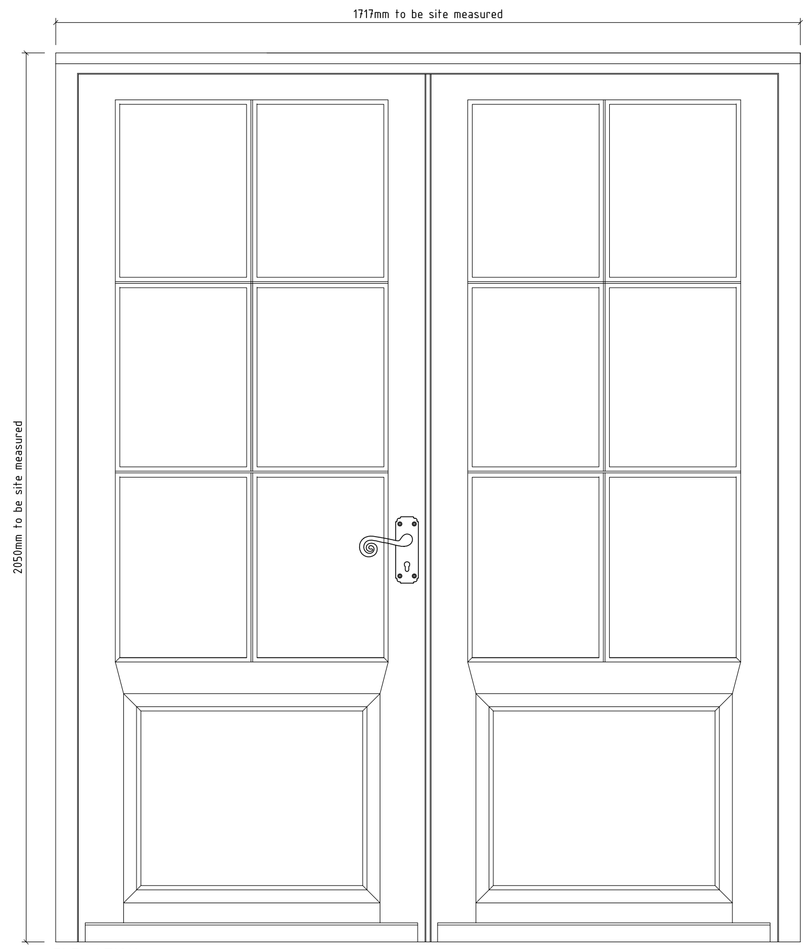

ELEVATION

ED02

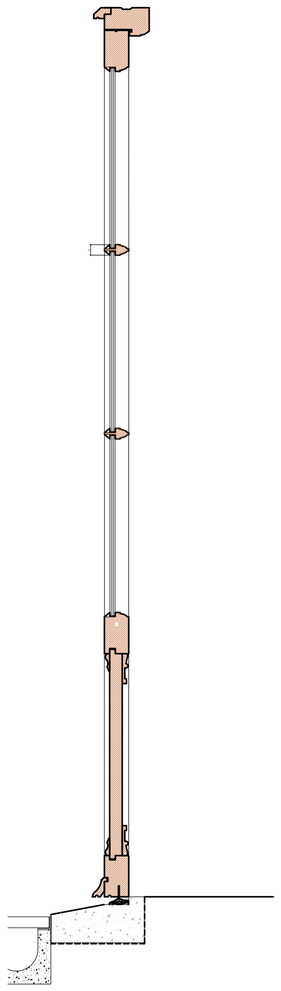

SECTION

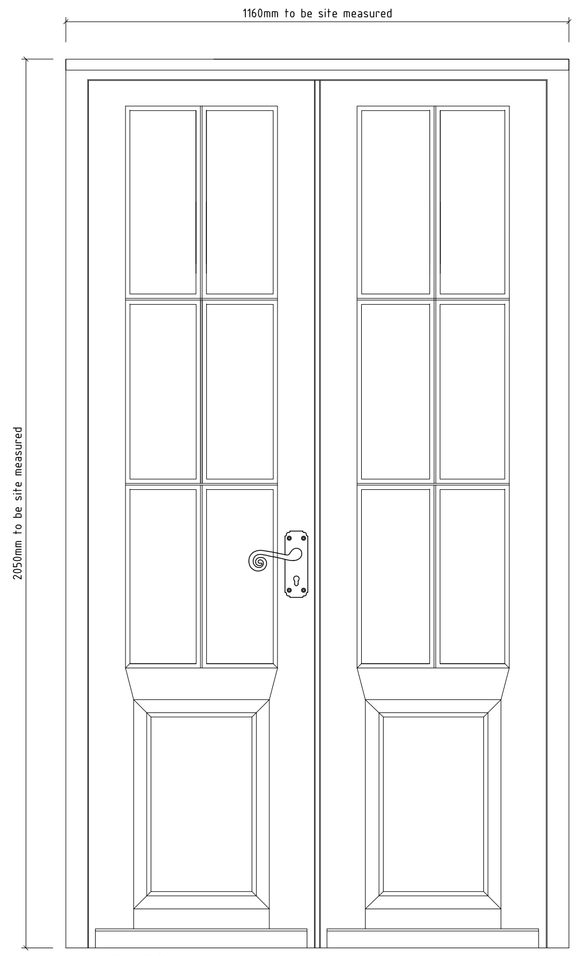

ELEVATION

ED03

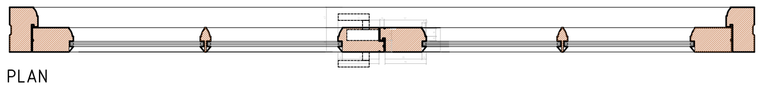

PLAN

Note: Door sizes are approximate and openings must be measured on site prior to being made

DOOR CONSTRUCTION NOTES:

Site dimensions must be taken prior to manufacture. Provide joinery rods for approval prior to fabrication.

Allow for supply and fixing new ironmongery. Jim Laurence or to clients choice
Allow five lever lock & £160 supply for the handle

Door leaves are to be manufactured in joinery grade Accoya to section sizes illustrated on the drawing.
All surfaces are to be prepared, primed using Graphenstone four 2 four and finished with Graphenstone mid sheen

All weather seals are to joiners choice but must go all around the frame and be black or brown.
Joiner is to supply & fit all ironmongery to ensure it fits and check dimensions of ironmongery fitted.
Joiner is to select and size chosen No. hinges as required for the opening element and weight.
Hinges to be black if possible.
Door thresholds to have stone cill with seal master tornado/TMC secured down
All doors to have dpc around frame and cills

Glazing:

Slim double glazed units manufactured by Histoglass (they have all three parts)
4mm thick toughened Clear float outer pane,
4mm gas filled cavity, with white aluminium spacer bar, (tbc depending on door paint)
4mm thick thoughened Ultra Clear Low E glass inner pane.
Double glazed units to be installed on a non hardening butyl compound, secured with glazing sprigs and finished with putty, all in accordance with the glazing manufacturer's recommendations.

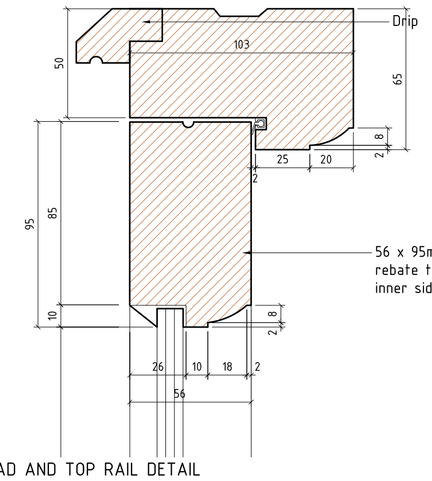

TYPICAL HEAD AND TOP RAIL DETAIL

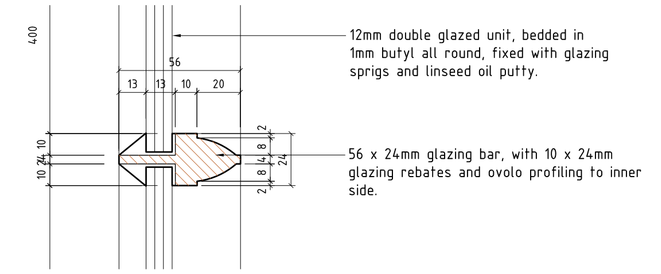

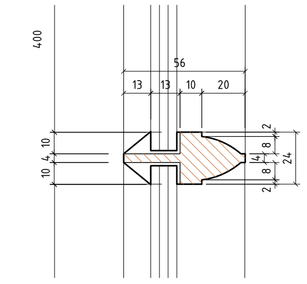

TYPICAL GLAZING BAR DETAIL

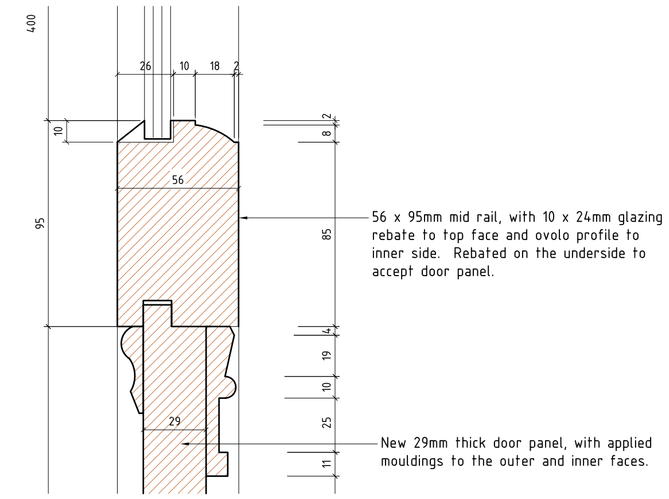

TYPICAL MID RAIL DETAIL

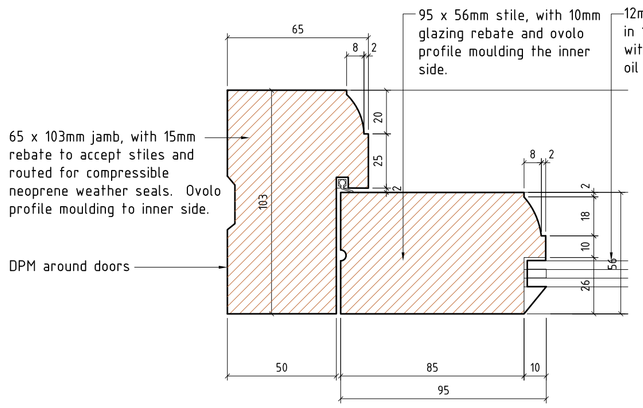

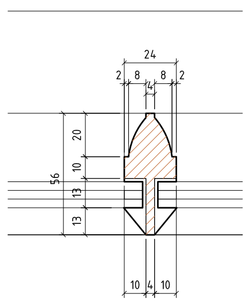

TYPICAL GLAZING BAR DETAIL

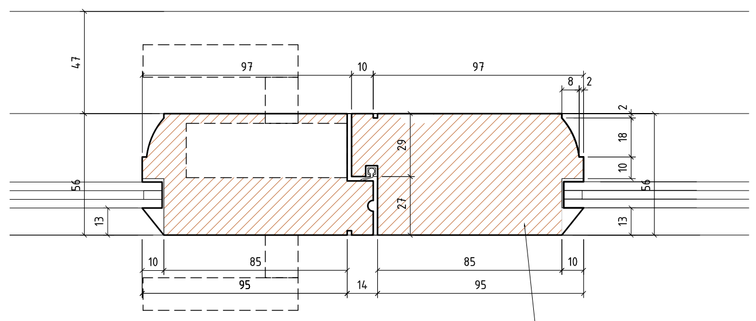

TYPICAL MEETING STYLE DETAIL

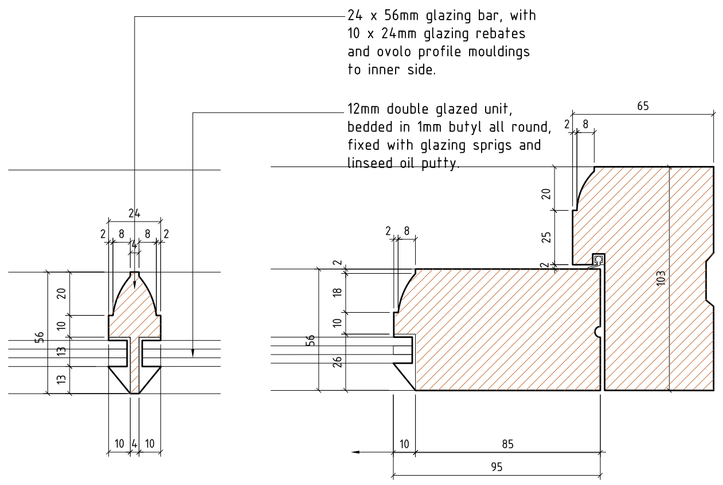

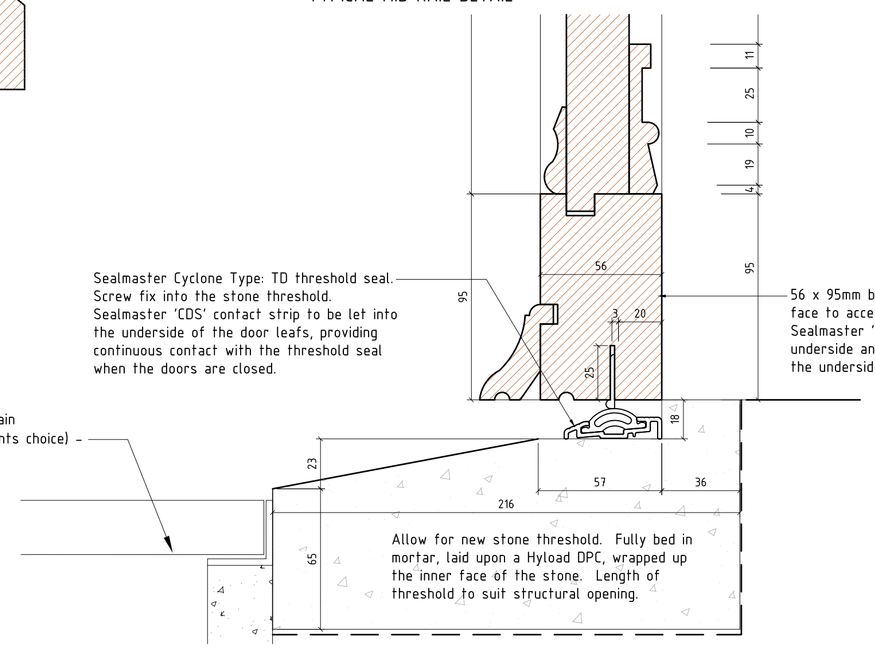

TYPICAL CILL/BOTTOM RAIL DETAIL

GENERALLY:
All planning/listed building consent conditions must be approved by the Local Authority prior to the commencement of the works.
Adhere to all planning/listed building consent conditions for the duration of the works.

All construction must comply to the current Building Regulations, whether indicated on the drawings or otherwise. The Contractor is to request staged inspections by the Building Control Officer and request a Completion Certificate at the end of the works.

All dimensions are to be verified on site prior to the ordering of materials and components and before work commences. Do not scale from the drawings.

All materials and fixtures/fittings are to be installed in accordance with the manufacturer's recommendations.

comment & pricing issue

TYPICAL FRENCH DOOR DETAILS
GLAZED WINDOWS

for MR & MRS SCOTT
SHELLEY HALL
IPSWICH
IP7 5QX

© The copyright of this drawing belongs to Kay Pilsbury Thomas

NO	1938 / WD / 310	REV A	CHECKED ST
SCALE	1 : 10 1 : 2 @ A1	DATE MARCH '21	DRAWN JO

KAY PILSBURY THOMAS ARCHITECTS
TEL 01799 599208 FAX 01799 599965
www.kpt.co.uk info@kpt.co.uk
HONEYLANDS.RADWINTER.SAFFRON WALDEN.ESSEX CB10 2TJ