PERMITTED NEW DWELLING AT WHITE HOUSE FARM, TRUNCH, NORFOLK

CONSTRUCTION ENVIRONMENTAL MANAGEMENT PLAN

FINAL

Prepared by:
Philip Parker Associates Ltd
White Row Cottage
Leziate Drove
Pott Row
Kings Lynn
Norfolk
PE32 1DB

Prepared for:
Peter Birkbeck and Maria Cornish

Report ref: 2019-54 R1 FINAL

Date: 16th July 2021

CONTENTS

Appendix

DOCUMENT HISTORY				
Project reference: 2019-54 R2		**Document title: Preliminary Ecological Assessment**		
Revision	**Status**	**Originated**	**Reviewed**	**Date**
Rev. 1	Working Draft	Rebecca Easter	Philip Parker	16/07/2021

1.0 INTRODUCTION

1.1 Peter Birkbeck and Maria Cornish have been granted planning approval from North Norfolk District Council (NNDC) for the construction of a new property at White House Farm, Trunch (Planning Permission Ref: PF/20/0730).

1.2 The planning application was accompanied by a Preliminary Ecological Appraisal (PEA) prepared by Philip Parker Associates (report Ref P2019-54; plan shown in Appendix 1). This identified the following:

Bats

There were no structures nor mature trees on the site that had the potential to support roosting bats, although the surrounding vegetation could provide suitable habitat to support foraging and community bats.

Hedgehog

The site provides suitable habitat for foraging hedgehogs although no obvious evidence was noted during the preliminary survey.

Birds

The site provides suitable habitat for a range of ground nesting birds. The surrounding trees and bramble scrub provide potentially suitable nesting habitat for a range of passerines.

Reptiles and Amphibians

The closest two ponds were 435m (P1) and 440m (P2) east of the site. The site provides moderate potential for reptile presence (slow worm, grass snake and viviparous lizard) where tussocky grassland and scattered scrub was present.

1.3 The requirement for subsequent survey work (reptile survey undertaken in 2020) identified the absence of reptiles on site but discovered the presence of an active badger outlier sett (Sett A) within the red line boundary. Monitoring of the sett in 2021 discovered an additional two hole outlier sett (Sett B).

1.4 As part of the planning approval, NNDC have requested that a Construction Environmental Management Plan (CEMP) is prepared to safeguard the local environment from the development (Condition 8).

The condition states:

"No development shall take place (including any demolition, groundworks, or site clearance) until a method statement for bats, nesting birds, reptiles and other identified protected species has been submitted to and approved in writing by the Local Planning Authority. The content of the method statement shall include:

a. Purpose and objectives for the proposed works;
b. Detailed design(s) and/or working method(s) necessary to achieve stated objectives (including where relevant, type and source of material to be used);
c. Extent and location of proposed works shown on appropriate scale maps and plans;
d. Timetable for implementation, demonstrating that works are aligned with the proposed phasing of construction;
e. Persons responsible for implementing the works;
f. Initial aftercare and long term maintenance (where relevant); and
g. Disposal of any wastes arising from works.

The works shall then be carried out strictly in accordance with the approved details and timescales and shall be retained in that manner thereafter.

1.5 Philip Parker Associates have been instructed to prepare this information.

1.6 The aim of the CEMP is to provide details on management measures to minimise environmental impacts as a result of the construction phase and subsequently throughout the project. The framework outlined in this report should be revised if any activity or conditions on site change, with new information being added as appropriate.

2.0 PURPOSE AND OBJECTIVE FOR THE PROPOSED WORKS

2.1 SITE DESCRIPTION

The proposed development site is located at Trunch at Ordnance Survey Grid Reference TG 28823 34914.

2.2 The proposed development site comprised a semi improved grassy meadow (approximately 0.32 ha) with some scrub and ruderals, surrounded on three sides by a mix of broadleaved trees and dense/continuous scrub hedgerows, opening onto an arable field to the north of the site. At the time of the preliminary ecological survey in 2019, a pile of cut wood was present towards the west of the site. The meadow has been periodically mowed over the years, with clear pathways recently mown in during the survey. Several times per year, the whole of the meadow is mown to prevent further development of scrub and ruderals.

2.3 The land use to the east was a farm with houses and Mundesley Road running to the south and west of the site.

2.4 No designated sites were noted within the 500m NBIS data search or on the MAGIC.gov website.

2.5 PROJECT DESCRIPTION

The development comprises of a single, two-storey, three bedroomed dwelling with access via a new road entering the site from the south-east. The application area covers approximately 0.34ha and the footprint of the building is 125m^2 with a gross floorspace of 295m^2 (Appendix 2).

2.6 The approved dwelling will comprise (as per Drawing 19.041-002, 003, 004, Rev D) of a red pantile roof supporting a brick and grey metal chimney, grey cladding and black framed windows and doors . A grey timber garage door is also proposed. The main dwelling is linked to a garage with a single bedroomed guest suite above the garage by a single-storey walkway.

2.7 Access to the property will be served via a new crushed stone 3.5m wide access track from Mundesley Road, entering the site from the south-west. For part of the route this will be a non-dig construction to provide protection to tree roots.

2.8 SUMMARY OF ECOLOGICAL ASSESSMENT

Habitats

The proposed development will result in the loss of an area of semi-improved grassland including grass species cocksfoot *Dactylis gomerata*, false oat-grass *Arrhenatherum elatius* and Yorkshire fog *Holcus lanatus.* Herbaceous species included hogweed *Heracleum sphondylium*, ragwort *Jacobaea vulgaris,* horse raddish *Armoracia Rusticana*, creeping thistle *Cirsium arvense*, black knapweed *Centaurea nigra,* and field bindweed *Convolvulus arvensis*. Areas of cow parsley *Anthriscus sylvestris* and Fat hen *Chenopodium album* were located to the north-west of the site. Sections of Tall ruderals comprising common nettle *Urtica dioica,* Broad leaved dock *Rumex obtusifolius* and Rosebay willowherb *Chamaenerion angustifolium* will also be lost.

2.9 Bats

The survey concluded that no man-made structures or mature trees were present on the site that could be used as bat roosts. However, the tree lined margins have potential to attract foraging and commuting bats and some of these may have potential for roosting bats (these were not been assessed any further) bordering the site and any increased lighting could result in post-development interference impacts on any foraging bats which utilize the site as part of their core foraging zone. T2 (Ash) and T3 (Sycamore), highlighted in the arboricultural report, are to be removed as part of the proposed development for the access. Both trees were assessed using the above survey methodology. Both trees were considered to have low to negligible potential to support roosting bats.

2.10 Badgers

During the original Preliminary Ecological Appraisal, the site was considered to have potential to support badgers although no evidence was noted. However, during the initial reptile survey on the 15th of May 2020, a previously hidden hole was noted at grid reference TG 2882134899 (Sett A) (the field had been mown since the Preliminary Ecological Appraisal of site to expose the hole). The hole was checked for hairs and surroundings were checked for signs of badger use; no evidence was noted. Over the next three visits to the site, a spoil heap formed outside the hole along with discarded bedding suggesting badger activity.

2.11 To confirm if the hole was in use by badgers, a camera trap was set on the 2nd June 2020 and left out for six consecutive days and nights. A single badger was confirmed to be using the hole on three separate days.

2.12 This has been classified as a badger outlier. Further surveys around the margins to the site did

not reveal any further badger setts in 2020.

2.13 The location of the badger sett means that it is likely to be located within 11m of the proposed house location and on the line of the access track and will therefore be directly impacted.

2.14 In 2021 an additional two holed badger sett (Sett B) was noted at approximately TG 2883 3487 during an inspection undertaken on 30th April 2021 by assistant ecologist Rebecca Easter. During the inspection two cameras were placed on Sett A and B between April 30th – May 10th 2021. A single badger sighting was noted on the camera covering Sett A but nothing on Sett B during this period.

2.15 **Hedgehog**

The site provides suitable habitat for supporting foraging hedgehogs, with a mosaic of shorter and longer grassland for foraging and areas of bramble and other cut logs etc that provide potential cover. There is some connectivity to the surrounding area via the boundaries connecting to the wider arable landscape. Caution should still be given due to the possibility (although limited) of hedgehog's presence in vegetation on site.

2.16 **Breeding birds**

Two trees are to be removed as part of the works, these were shown to have limited breeding bird potential. Caution should still be given to the possibility of ground nesting birds within the longer vegetation on site. Two category C trees are to be removed to allow the new access to be installed, these are noted as T2 and T3 on drawing D2, these were shown to have negligible bird nesting potential.

2.17 **Reptiles and amphibians**

The site contains several features that could support the more common reptile species that occur in Norfolk (slow worm, viviparous lizard and grass snake). The site is unlikely to provide suitable habitat for adder. There is some connectivity between the site and the surrounding environment via areas of rough grassland connecting to arable farmland and their borders to the north. As such, the site was considered to have moderate reptile potential, and a significant proportion of this will be disturbed by the proposed development. Seven refugia surveys were undertaken between the 15/05/2020 and 08/06/2020, no reptiles were recorded, and they are therefore assumed to be likely absent from the site.

2.18 Potential impacts on great crested newts is not anticipated given the distance to the closest waterbodies (3 within 500m, 2 at 435m east) although caution should still be given to the potential for common amphibians to occur on site.

2.19 **Potential impacts of the development on ecological value**

The proposed construction will impact on two identified badger setts, whilst additionally having the potential to impact on bird nesting habitat (trees and scrub), common amphibians (likely limited) and small mammals (the rough grassland) but as evidenced by the surveys undertaken it will not have any direct impact on bats or reptiles.

2.20 The purpose of this CEMP is to ensure that the proposed works will not have any impact on these designated features of interest.

3.0 DETAILED DESIGN AND WORKING METHODS

3.1 CONSTRUCTION TIMINGS

It is anticipated that the development will commence on 6th September 2021 and the works will take 9 months to complete. It is also anticipated that the enabling works will be completed in August: trenching for services, forming non dig access at site entrance, forming temporary access to the house for the works.

3.2 CONSTRUCTION METHODOLOGY

The development will be undertaken in the following order.

a) **Site set-up** – The layout of the development will be set out on site including any buffer zones, particularly to protect the roots of the retained trees. The extent of the working area is shown on Tidswell Childs Drawing 19.041-W01 (Appendix 2) whilst the detail of the buffer zones is shown in the Arboricultural Impact Assessment prepared by A. T. Coombes Associates Ltd dated 23rd April 2020. This includes the extent of buffer zones as required to protect tree roots. The extent of the working areas and the root protection buffers are shown in Appendix 3.

b) **Groundworks** – Prior to the development commencing, the existing grassland within the identified working area (including that within the Root Protection Area), will be strimmed, and the groundworks undertaken by the nominated contractor; Norfolk County Construction Ltd. Depth of foundations will be approximately 900 – 1000mm below ground levels, subject to BCO approval and ground conditions. The initial access to the site will be a 'no dig' built up surface to minimise the impact on the adjacent tree RPA's. The remainder of the access, parking and turning areas will require excavations to a depth of 200mm below the existing ground levels, before building back up with layer of geotextile, 150mm DT Type 3 hardcore (permeable) and max 50mm thick layer of angular 20mm gravel as finished surface. Verges are to be soft to surrounding grass. The depth of the cut of the parking area will extend over Badger Sett A.

c) **Construction of the building** – Details of the building construction is shown on Drawing 19.041 – 003 revision D by Tidswell Childs. This indicates a property over 2-storeys the main section of the dwelling comprising of 3 bedrooms, a living area and kitchen/dining areas. The main dwelling is linked to a garage with a single bedroomed guest suite above the garage by a single storey walkway.

d) An access road to serve the new dwelling will enter the site from the south-west, from Mundesley Road. This will comprise of crushed stone, a new field gate, and will support an approximate width of 3.5m.

e) **Landscaping** – Details of the proposed landscaping for the development site are shown on the landscaping drawing and scheme prepared by Tidswell Childs on Drawing 19.041 – 002 Revision D (Appendix 2). This indicates the following;
   - Retention of existing trees and planting along the south-western and south-eastern edge of the site
   - New timber post and rail/wire fencing, tree planting and a mixed species hedgerow to be planted along the northern and eastern boundary of the site;
   - New tree planting throughout the site.

3.3 The extent of the proposed works is shown on Tidswell Childs Drawing 19.041-W01 (Appendix 2) appended to this report.

3.4 **ARBORICULTURAL ASSESSMENT RESULTS**

An Arboriculture Implications Assessment was undertaken by A.T. Coombes Associates Ltd in April 2020. A total of seven trees (field maple, ash, sycamore, oak and hawthorn) were assessed from ground level, four groups of trees were also assessed (hornbeam, beech, sycamore, ash, oak and silver birch). The report concluded;

'The large ash T4 and the mature tree group on the eastern boundary (G3) have been classified as category A which is the highest category available under the British Standard 5837:2012. These trees are large and important features in the local area, having been part of the landscape for over a century.

Three trees (T5, T6, T7) and three tree groups (G1, G2, G4) have been classed as Category B. These trees are generally in good condition and confer landscape values. They are suitable for retention where possible in the context of a development.

Three individual trees (T1, T2, T3) have been classified as Category C. These trees are small or in poorer condition and do not play such a significant role in the local landscape. C category trees are usually of such a quality that the Local Authority may consider it acceptable for them to be removed for development purposes, if required'.

3.5 **PROTECTED SITES**

No designated sites were noted within 500m of the development site.

4.0 PREDICTED ECOLOGICAL IMPACTS RESULTING FROM THE PROPOSED DEVELOPMENT

4.1 The development as set out in Section 3.0 above could have the following potential impact on identified ecological value around the site:

4.2 **HARM TO RETAINED TREES**

Inappropriate methods of construction could cause damage or compaction of tree roots of the retained trees (in particular those around the access route to the south-east).

4.3 **HARM TO PROTECTED SPECIES**

The proposed development could impact on the following species that were identified as part of the Preliminary Ecological Appraisal and further survey works as follows:

4.4 **Badgers**

Three badger setts have now been identified in the locality (as shown in Appendix 5):

- **Sett A** – located 11m south of the property (although the tunnel runs to the west away from the property). Sett A does however fall within the proposed parking area and will therefore be directly impacted). The hole was active when surveyed in June 2020 and again in May 2021
- **Sett B** – 40m to the south-east of the proposed property but 11m from the proposed access road. The tunnels run to the north towards the access road. There could therefore be impacts on this sett from the construction of the road.
- **Sett C** – 110m to the south-east of the proposed property and separated from site by Mundesley Road. 5 active holes, no impacts are anticipated by the proposals.

4.5 **Breeding birds**

Suitable habitat on site such as grassland provides opportunity for ground nesting birds, whilst the surrounding trees and bramble scrub provide potentially suitable breeding habitat for a range of passerine birds. The clearance of these areas to facilitate the development will result in the loss of nesting habitat and could result in the destruction of active nest sites.

4.6 **Reptiles/amphibians/small mammals**

Habitat on site is considered to have suitability to support protected (as well as common) amphibians. There are no likely impacts on the loss of great crested newt habitat from the loss of the grassland whilst surveys have shown reptiles to be likely absent and as such it is considered that this group will not be impacted on by the development.

4.7 Small mammals could be killed/injured during habitat clearance.

5.0 ECOLOGICAL MITIGATION/ENHANCEMENT (INCLUDING TIMESCALES, PERSONEL, AFTERCARE/MANAGEMENT AND DISPOSAL OF ARISINGS)

5.1 LEGAL REQUIREMENTS AND PLANNING POLICY

The delivery of biodiversity enhancement on development sites is promoted by the National Planning Policy Framework (NPPF) and Section 40 of the Natural Environment and Rural Communities (NERC) Act 2006. All operations in respect of the trees will be carried out in accordance with BS 5837: 2012.

5.2 ECOLOGICAL MITIGATION RATIONALE

The rationale for the ecological mitigation/enhancement is to protect any existing ecological value as identified during the surveys so there is no net loss and where practical enhance the value of the site for biodiversity in the long term.

5.3 TOOLBOX TALK

Prior to any works commencing on site, the nominated main contractor/ tree surgeon will be presented with a tool-box talk which will set out all of the constraints and the mitigation that needs to be followed on the site to safeguard the environment and ecological value. The main contractor will be required to sign a copy of the tool-box talk to confirm it is all understood and accepted. The main contractor/ tree surgeon will have the responsibility of ensuring all sub-contractors and visitors to the site are aware of the obligations.

5.4 HABITAT/SPECIES MITIGATION

Details of how the impacts identified in Section 4 will be mitigated are set out in the following section.

5.5 *Tree protection*

Tree protection fencing will be fitted following any tree works as shown in the Arboricultural Impact Assessment prepared by A.T. Coombes Associates Ltd dated 23rd April 2020. This fencing will remain in situ throughout the construction phase. This will be of a standard so as to prevent machinery entering the protected zones. The location of the protection fencing and type is shown in Appendix 4 of this report. Notices highlighting the fact that the area cannot be accessed for storage or work, will be attached to the fencing. All personnel are to be informed as to the role of the fencing during a toolbox talk prior to the commencement of any works on site.

5.6 ***Onsite storage during construction***

All of the material storage will be located within spaces outside of the RPA of the retained trees.

5.7 ***Access during construction***

Access onto the site during the construction phase within the RPA is required, therefore ground protection of a standard is required to limit damage to tree roots. This will be required for both vehicular and pedestrian access. Where access is agreed within the RPA a combination of barriers and ground protection in the form of a Construction Exclusion Zone (CEZ) will be installed, this is outlined within the approved arboriculture report.

5.8 Access onto the site post construction will intercept the RPA of a category A, (highest category) ash (T4) and category B group (G1). Given this a non-dig surface at or above ground level is required to minimise the impact to the tree. Prior to the installation of the non-dig surface temporary ground protection will be required. A sacrificial layer of stone will be laid over the surface for the duration of the works. On completion the sacrificial stone will be removed and a final surface will be laid consisting of max 50mm thick layer of angular 20mm gravel. Details of a no dig surface are outlined in the arboriculturists report. No access by construction traffic will be permitted until this is in place.

5.9 **Bats**

There were no structures nor mature trees on the site that had the potential to support roosting bats, although the surrounding vegetation could provide suitable habitat to support foraging and community bats. No impacts on roosting bats are anticipated, no specific mitigation measures are considered necessary.

5.10 ***Lighting***

In order to limit any effects on bats within the surrounding area, the following must be adopted with respect to lighting: Any external lighting should be limited to only that absolutely necessary for safety purposes;

- The brightness of the lighting should be as low as possible and kept at a low level and directed away from the boundary vegetation and any new bat boxes/roosting areas;
- Narrow spectrum lighting with no UV light is preferred;
- Luminaires should feature peak wavelengths higher than 550nm to avoid the component of light most disturbing to bats;
- Lighting on sensors should not be so sensitive that foraging bats set them off and should be on short timers (1 minute).
- Lighting must not illuminate the boundary vegetation and areas of new tree planting. Furthermore, lighting must not illuminate any proposed bat/bird boxes.

5.11 ***Habitat enhancement***

In order to enhance the site for roosting bats, six oak Kent bat boxes (Figure 1) will be installed on trees to the south of the site. These will be erected three to a tree, one facing north, south-eastern and south-western aspect, at a height of 5-6 metres. These will be erected by the ecologist to ensure the optimum location prior to the construction of the house commencing. Further bat roosting habitat will be included into the development through the installation of two externally mounted bat boxes (most appropriate to the design of the building) onto the walls of the new dwelling facing south or west. Proposed locations are shown in Appendix 8.

Fig 1 – Kent bat boxes on a tree

5.12 Incorporation of night scented flowers into any garden planting would attract moths and other insects on which bats feed, thus increasing the potential for presence and use of the new roosting facilities. Suggested plants can be found in Appendix 7.

5.13 **Badger**

Proven badger use on site was recorded in both 2020 and 2021 (within Sett A). Badgers are protected under the Protection of Badgers Act 1992 which protects badger from killing and injury, and their setts from damage, obstruction and disturbance. Therefore, it is important that the works also, where possible improve the surrounding environment so as to enhance the favourable conditions and conservation status of badgers locally. A 30m buffer zone around a sett should be implemented to protect the sett. Where a 30m buffer zone is not feasible, a Natural England license to allow the destruction of the sett may be required (depending on whether setts are active at the time of the development and the nature of the proposed works).

5.14 The following Natural England guidance is given by interpretation of "current use", with respect to the definition of a badger sett in the Act:

- 'A badger sett is protected by the legislation if it "displays signs indicating current use by a badger". A sett is therefore protected as long as such signs remain present. In practice, this could potentially be for a period of several weeks after the last actual occupation of the sett by a badger or badgers.
- It follows that demonstration of the fact that a sett is not occupied by badgers does NOT necessarily exempt it from the protection afforded by the Act if it still displays signs otherwise indicative of current use.
- A sett is likely to fall outside the definition of a sett in the Act if the evidence available indicates that it is NOT in use by badgers; e.g. absence of badger field signs, debris in sett entrances etc. In practice, such a sett may have been unused for several weeks'.

5.15 **Sett A -** The construction of the parking area and access road will directly impact on this sett. A licence will therefore be required for its closure unless it is shown to be inactive for several weeks by monitoring..

Sett B - Temporary closure of the sett during the construction of the access road unless the sett has shown to be inactive for a period of several weeks by monitoring. It is possible that this sett could be re-opened following completion of the works.

5.16 ***Sett exclusion and demolition***

Assuming Sett A remains active, prior to works to directly impact commencing and once the license to close the sett has been granted, a one-way badger gate can be constructed over the entrance to each hole (see Appendix 6 for details) to allow badgers to leave the sett but not re-enter so that when the sett is destroyed no badgers are harmed / left trapped underground.

5.17 Once fitted the gated sett should be monitored every 3 days by an appropriate ecologist for a period of 21 days, to ensure that badgers have not dug back into the sett. If this is found to have happened the gate will need to be re-fitted and the monitoring period re-started. During the monitoring the gate should also be checked to ensure that it remains free to swing and that it closes properly.

5.18 Once the 21-day period is complete and the sett is confirmed as empty, the sett should be promptly dug up (under supervision of the ecologist) to prevent badgers returning and being put at risk.

5.19 ***Temporary sett exclusion***

Sett B is to be temporarily excluded for the construction of the access road. The process of using a one-way badger gate along with monitoring as detailed above should be adopted. Once the 21-day monitoring period is completed heavy-gauge chainlink or weld mesh will be installed over the sett entrance. Once the construction phase of the development is completed the mesh/ chanlink over the sett entrances should be removed to allow badgers to re-access the sett.

5.20 Preparation work which involves digging of the ground i.e. installing cables, may be permitted without a licence providing this does not go directly impact the badger holes/tunnels and are dug and installed by hand. Any works involving machinery close to the setts are likely to need a licence in place before proceeding.

5.22 **NB:** All badger setts will continue to be monitored using sticks and camera traps. Should they show no evidence of use for at least four weeks, they could be considered to be unoccupied and a badger licence may not be required.

5.23 ***Habitat mitigation/enhancement***

New hedgerows/trees and planting along the northern boundary are also proposed as part of the development along with the addition of wildflowers and new tree planting across the site which will help to provide mitigation and enhancement. These will help to mitigate the loss of any badger foraging areas as part of the development.

5.24 ***Lighting***

Any lighting associated with the development will be directed away from any badger setts during and after the construction phase to limit disturbance to foraging badgers.

5.25 **BREEDING BIRDS**

Bird nesting habitat, such as bramble scrub, T2 and T3 (although limited bird nesting suitability) and rough grassland should be undertaken outside the bird nesting season, which is generally seen as extending from March to the end of August.

5.26 ***Habitat enhancement***

The new hedgerows and tree planting will provide new areas of bird nesting habitat across the site once established. To provide further nesting opportunity for breeding birds, one house sparrow terrace (Figure 2) and two swift boxes (Figure 3) should be installed onto the new house (the location for this is shown in Appendix 8). These should be placed in a quiet location facing a northern or eastern aspect.

Figure 2 – Ecostyrocrete sparrow terrace

Figure 3 – Swift box

5.27 **HEDGEHOG/SMALL MAMMALS/ COMMON AMPHIBIANS**

Extra caution should be taken during the clearance of longer vegetation across the site and should incorporate the following methodology;

a. Any areas of taller vegetation in the development area (including that on the mounds) should first be cut to 150mm and carefully raked off. After three days the areas should be carefully searched by hand after which the vegetation should be cut to ground level and again raked over thus removing all cover. This should be done under the supervision of an ecologist.
b. Any areas that have been subject to cutting under the normal regime should be cut every two weeks to prevent the development of any areas of longer vegetation;
c. Clearance of piles of vegetation debris, general debris and rough vegetation should take place outside the amphibian hibernation period (typically October – March), in a careful and sensitive manner, **by hand**, to allow for any animals present to leave the area of their own accord (see also hedgehog and nesting birds);
d. All waste shall be placed directly into skips or designated areas so that further debris piles and therefore potential refuge areas are not created;
e. Piles of loose sand or other granular materials into which small animals could bury into are not to be left around the site. All such materials should be delivered in bags and kept in such bags until required for use. Bags should be stored on pallets. Alternatively, If it is essential that they are delivered loose, they should be retained in fenced areas which support bare ground;
f. Any animals found should be moved to a safe location of comparable habitat at the western edge of the site.
g. All excavations will be covered each night to limit the potential for small mammals and amphibians to fall in the excavation. They will also be provided will a ramp that will allow any animals that do fall into the excavations to escape.

h. All trenches will be carefully inspected prior to any infilling to ensure that animals have not become trapped. Any animals present will be carefully removed.

5.28 ***Habitat enhancement***

To maintain/enhance the site for small mammals and amphibians, areas of longer grass should be maintained around the site, notably to the north and east. These should be managed by cutting 1 or 2 times per year, cutting to a minimum height of 150mm. This is detailed in Appendix 8.

5.29 **CLIMATE CHANGE MITIGATION**

Energy efficiency standards of the current Building Regulations will be exceeded though the use of Solar PV and solar thermal units are proposed to augment the electrical supply and hot water systems. A bike shed is also proposed as part of the development, this will encourage and facilitate the use of sustainable transport and reduce congestion in the surrounding locality. In addition, there will be an electric car charging point located on site.

5.30 **FLOODING/WATER POLLUTION MITIGATION**

The development site is located within flood risk zone 1 for fluvial, in a very low risk area for surface flooding. As a precaution the surface water associated with the site will be managed through the use of water butts, soakaways, crates and the use of permeable materials. Infiltration rates have been measured and it has been confirmed that the proposed soakways will adequately deal with the likely run-off. Such mitigation will ensure that there is no run-off or other hydrological impact on surrounding protected habitats. It is noted however, infiltration rates will not be finalised until completion of trial holes and percolation tests as works progress.

5.31 **DUST MANAGEMENT MITIGATION**

Dust pollution needs to be considered throughout the demolition and construction phases of the development and how this might affect local vegetation.

5.32 ***Moving vehicles***

Visible exhaust smoke

- Vehicles and plant machinery will not be permitted to emit black smoke, therefore only well-maintained vehicles will be permitted to operate on site;
- Vehicles and plant machinery will be switched off when not in use.

5.33 ***Stockpiling/ storage***

- Material handling is to be kept to a minimum to prevent double handling and to ensure dusty materials are not handled unnecessarily;

- Transport of dusty materials and aggregates is to be done by using either enclosed or sheeted vehicles;
- Drop heights when emptying materials from vehicles is to be kept to a minimum;
- Dusty materials are to be dampened down to reduce the impact of dust on the surrounding environments;
- Once on site, fine and dry materials are to be stored in appropriate containers and indoors where necessary to protect them from the weather;
- To avoid emissions or pollution from spillages, all liquids are to be stored as per the oil storage regulations and Environment Agency Pollution Prevention and best Practice Guidelines.

5.34 ***Disposal of waste***

- No burning is permitted on site;
- Where dry/dusty waste is stored in skips, covers will be provided;
- Waste is not be allowed to build-up and skips are to be emptied regularly.

5.35 ***Earthworks, excavation and digging***

- Excavations will be kept damp to reduce wind-blown pollution, during dry (although not allowed to become sodden/ liquid to avoid water pollution as a result) and windy conditions when works will be avoided where possible;
- Completed earthworks/ landscaping will be stabilised through re-vegetation on exposed earth as soon as possible where applicable;
- Cutting/ angle grinding will be avoided where possible and diamond bladed floor saws with water pumped though to suppress any dust will be used where reasonably practicable.

5.36 **LANDSCAPING MITIGATION**

The approved landscaping of the site is shown on the extract of Drawing 19.041-SP01E as shown in Appendix 2.

5.37 New hedgerows/trees and planting along the northern boundary are also proposed as part of the development along with the addition of wildflowers and new tree planting across the site which will help to provide mitigation and enhancement.

5.38 A mix of approximately 40% Hawthorn *Crataegus monogyna*, 20% Blackthorn *Prunus spinosa* 5% Ash *Fraxinus excelsior*, 5% Hazel *Corylus avellana* and 5% Dog Rose *Rosa canina*. Plus 5% each from 5 other species inc: Field Maple *Acer campestre*, Cherry Plum *Prunus cerasifera*, Native Dogwood *Cornus sanguinea*, Crab Apple *Malus sylvestris*, Guelder Rose *Viburnum opulus*, Spindle *Euonymus europaeus*, Field Rose *Rosa arvensis*, Wayfaring Tree *Viburnum*

lantana will be planted along the northern boundary along with a new timber post and rail / wire fencing. The existing trees and planting along the southern and western boundaries are to be retained as part of the development.

5.39 As outlined in the arboriculturists report;

In order to mitigate the loss of the two trees to be removed (T2 and T3) a minimum of two new heavy standard rootballed or containerised trees (12 to 14cm stem girth) will be planted. The species, selected to be in keeping with the development, will be as follows:

Field maple - Acer campestre
Pedunculate oak – Quercus robur

5.40 These should be planted in accordance with the methods outlined in the arboriculturists report.

5.41 All of these measures will enhance the local environment in the long term.

APPENDIX 1 PHASE 1 ECOLOGY SURVEY PLAN

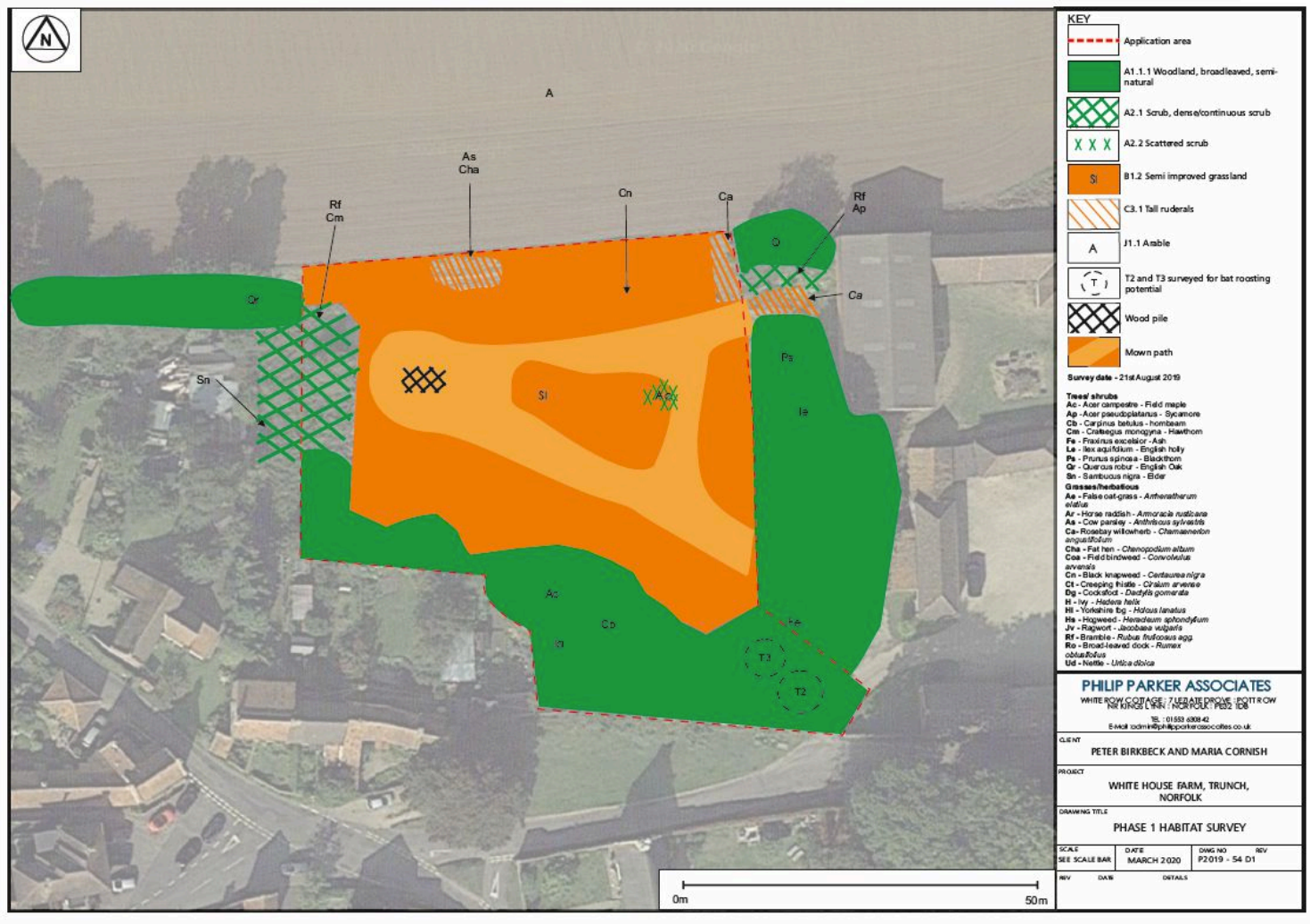

APPENDIX 2 PROPOSED DEVELOPMENT PLANS

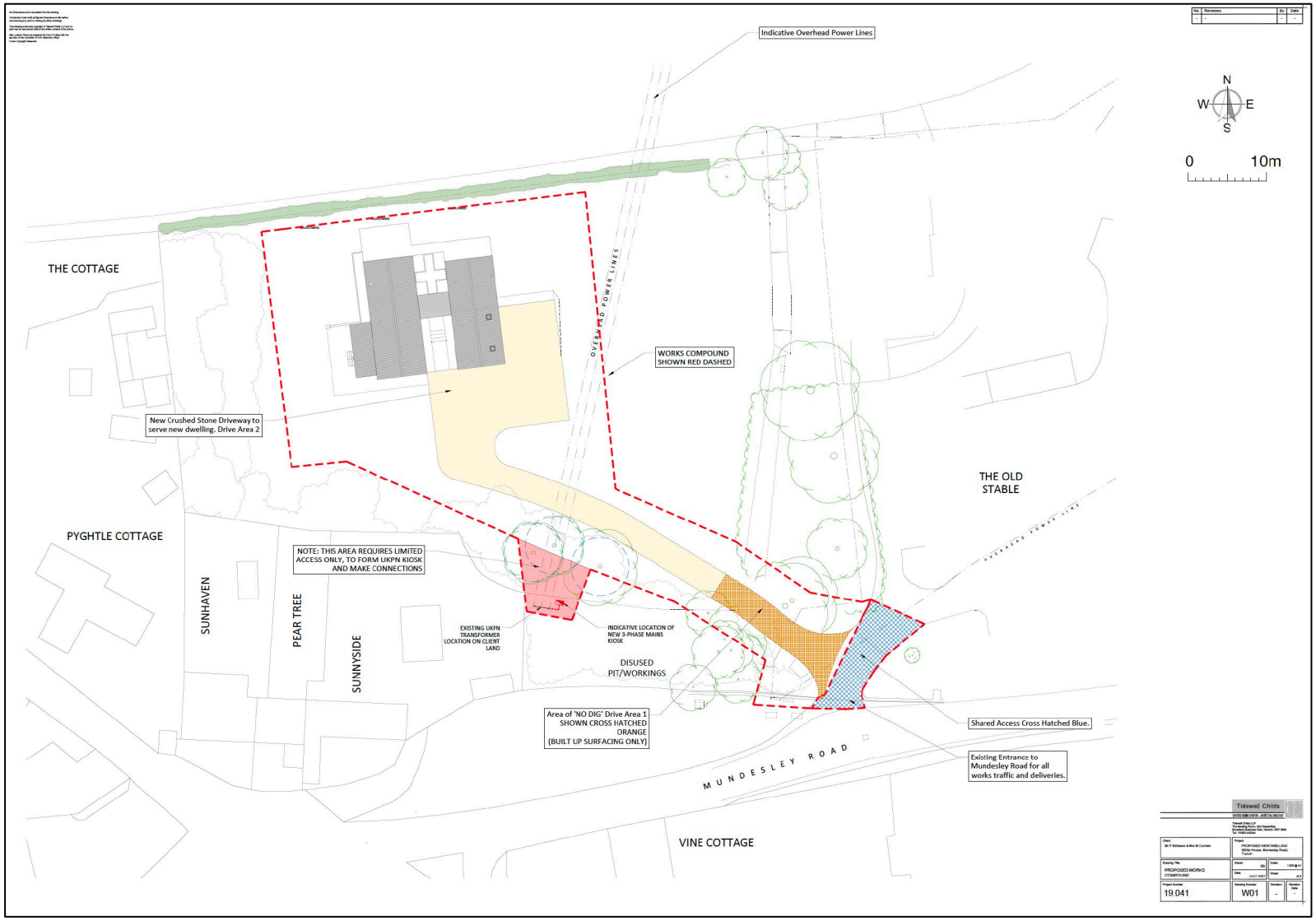
Indicative Overhead Power Lines
N
W
E
S
0
10m
THE COTTAGE
OVERHEAD POWER LINES
WORKS COMPOUND SHOWN RED DASHED
New Crushed Stone Driveway to serve new dwelling. Drive Area 2
THE OLD STABLE
PYGHTLE COTTAGE
NOTE: THIS AREA REQUIRES LIMITED ACCESS ONLY, TO FORM UKPN KIOSK AND MAKE CONNECTIONS
SUNHAVEN
PEAR TREE
SUNNYSIDE
EXISTING UKPN TRANSFORMER LOCATION ON CLIENT LAND
INDICATIVE LOCATION OF NEW 3-PHASE MAINS KIOSK
DISUSED PIT/WORKINGS
Area of 'NO DIG' Drive Area 1 SHOWN CROSS HATCHED ORANGE (BUILT UP SURFACING ONLY)
Shared Access Cross Hatched Blue.
Existing Entrance to Mundesley Road for all works traffic and deliveries.
MUNDESLEY ROAD
VINE COTTAGE
Tidswell Childs
PROPOSED NEW DWELLING
PROPOSED WORKS COMPOUND
19.041
W01

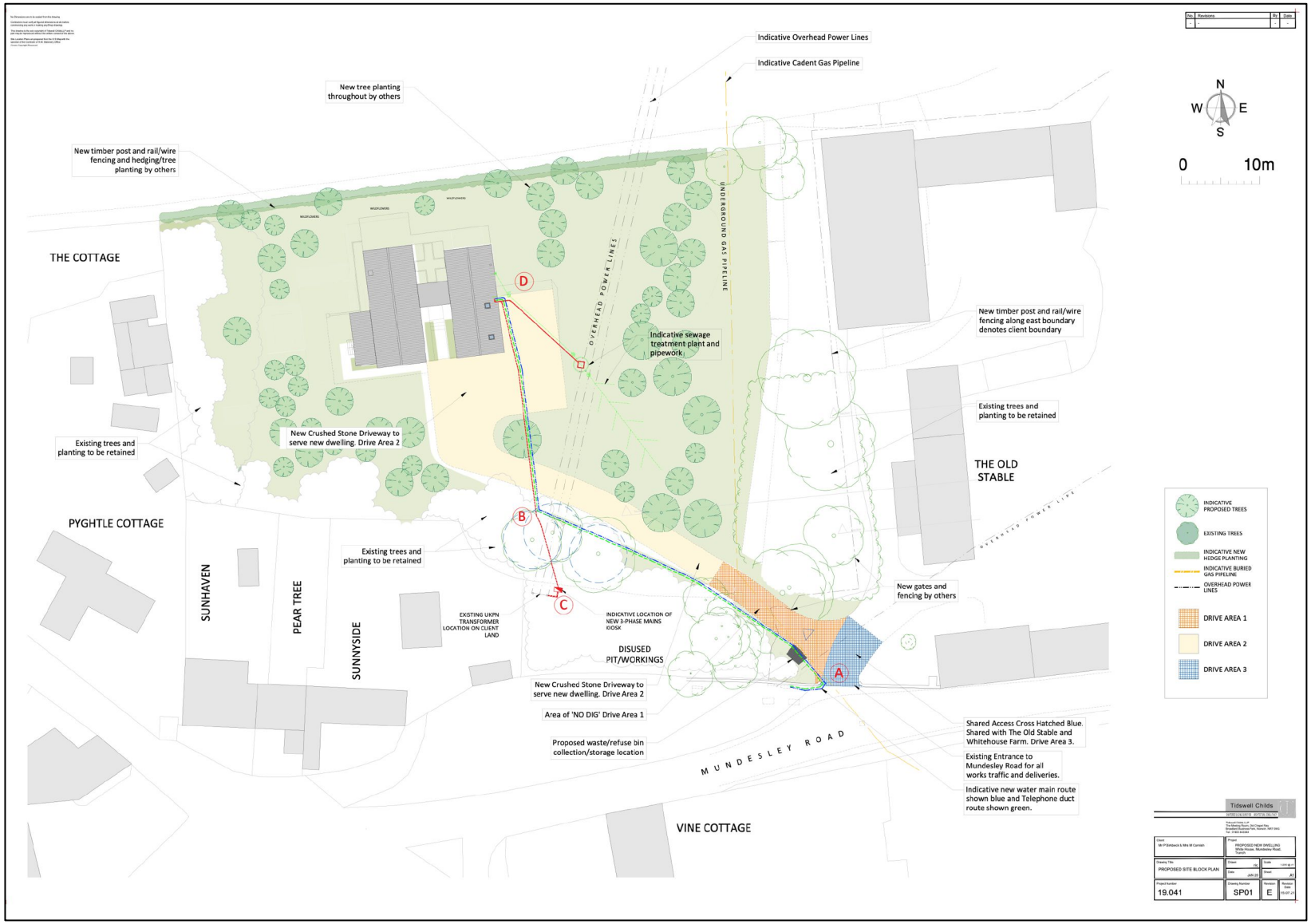
Indicative Overhead Power Lines
Indicative Cadent Gas Pipeline
New tree planting throughout by others
New timber post and rail/wire fencing and hedging/tree planting by others
THE COTTAGE
OVERHEAD POWER LINES
UNDERGROUND GAS PIPELINE
Indicative sewage treatment plant and pipework
New timber post and rail/wire fencing along east boundary denotes client boundary
Existing trees and planting to be retained
New Crushed Stone Driveway to serve new dwelling. Drive Area 2
Existing trees and planting to be retained
THE OLD STABLE
PYGHTLE COTTAGE
Existing trees and planting to be retained
SUNHAVEN
PEAR TREE
SUNNYSIDE
EXISTING UKPN TRANSFORMER LOCATION ON CLIENT LAND
INDICATIVE LOCATION OF NEW 3-PHASE MAINS KIOSK
DISUSED PIT/WORKINGS
New gates and fencing by others
New Crushed Stone Driveway to serve new dwelling. Drive Area 2
Area of 'NO DIG' Drive Area 1
Proposed waste/refuse bin collection/storage location
MUNDESLEY ROAD
Shared Access Cross Hatched Blue. Shared with The Old Stable and Whitehouse Farm. Drive Area 3.
Existing Entrance to Mundesley Road for all works traffic and deliveries.
Indicative new water main route shown blue and Telephone duct route shown green.
VINE COTTAGE
N
W
E
S
0
10m
INDICATIVE PROPOSED TREES
EXISTING TREES
INDICATIVE NEW HEDGE PLANTING
INDICATIVE BURIED GAS PIPELINE
OVERHEAD POWER LINES
DRIVE AREA 1
DRIVE AREA 2
DRIVE AREA 3
A
B
C
D
Tidswell Childs
Client
Mr P Dinbeck & Mrs M Cornish
Project
PROPOSED NEW DWELLING
White House, Mundesley Road, Trunch
Drawing Title
PROPOSED SITE BLOCK PLAN
Drawn
CG
Scale
1:200 @ A1
Date
JAN 22
Sheet
A1
Project Number
19.041
Drawing Number
SP01
Revision
E
Revision Date
19.07.21

APPENDIX 3 BUFFER ZONES – TREE PROTECTION AREA

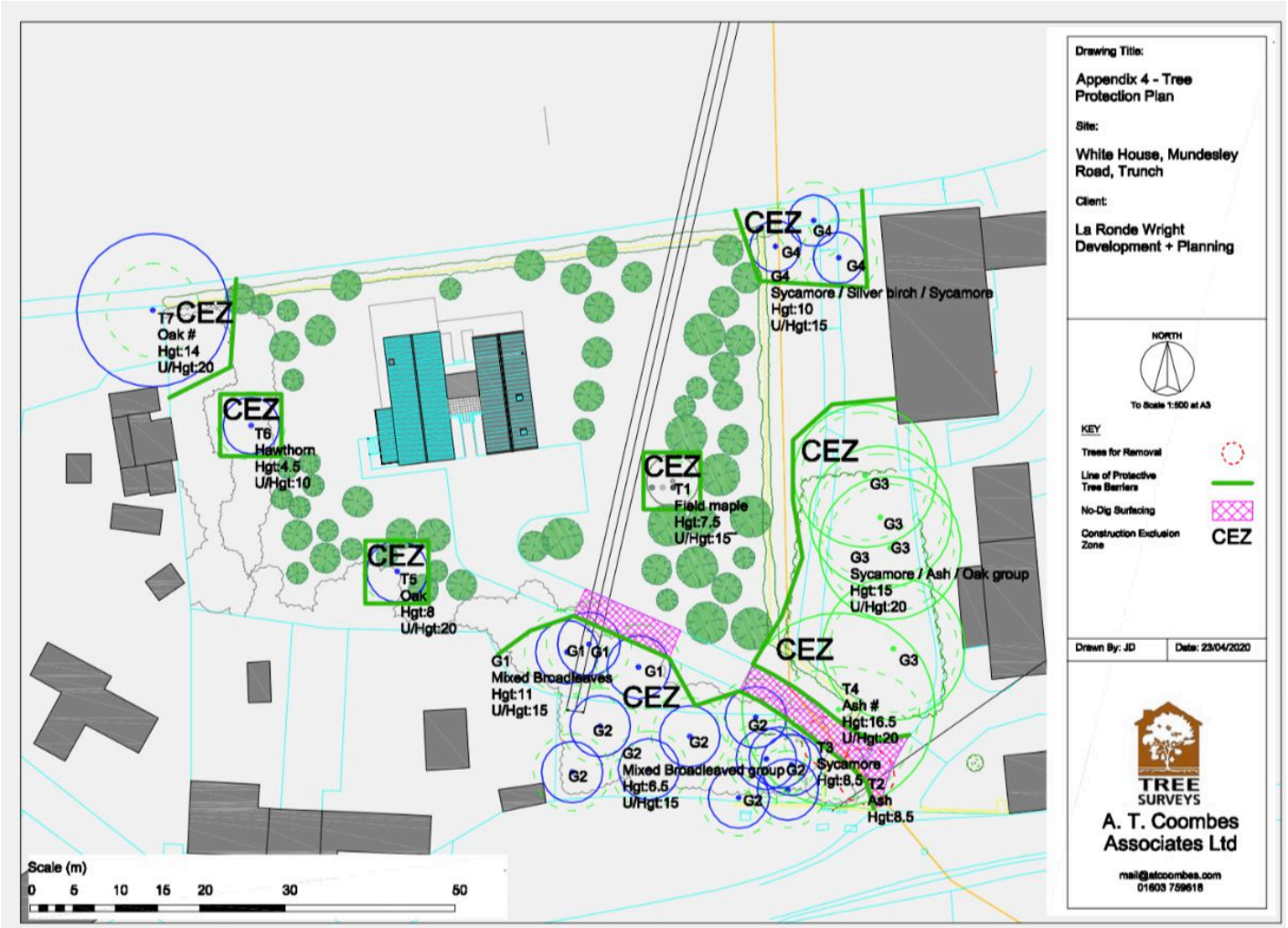

APPENDIX 4 TREE PROTECTION FENCING

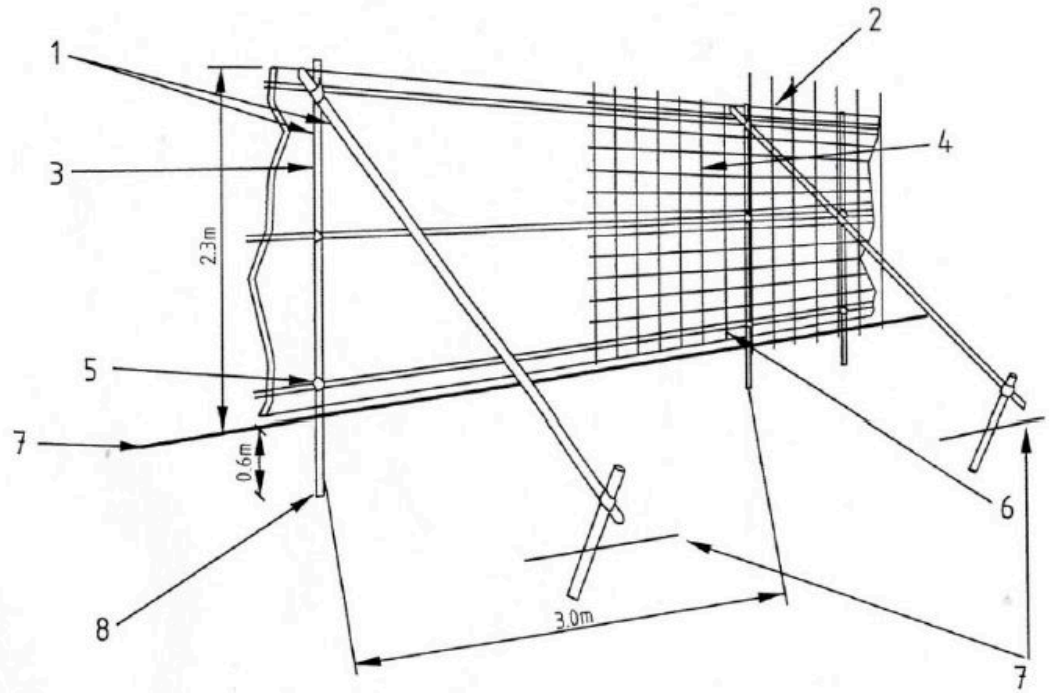

1 Standard scaffold poles
2 Uprights to be driven into the ground
3 Panels secured to uprights with wire ties and where necessary standard scaffold clamps
4 Weldmesh wired to the uprights and horizontals
5 Standard clamps
6 Wire twisted and secured on inside face of fencing to avoid easy dismantling
7 Ground level
8 Approx. 0.6 m driven into the ground

Figure 2 — Protective barrier

APPENDIX 5 BADGER MITIGATION PLAN

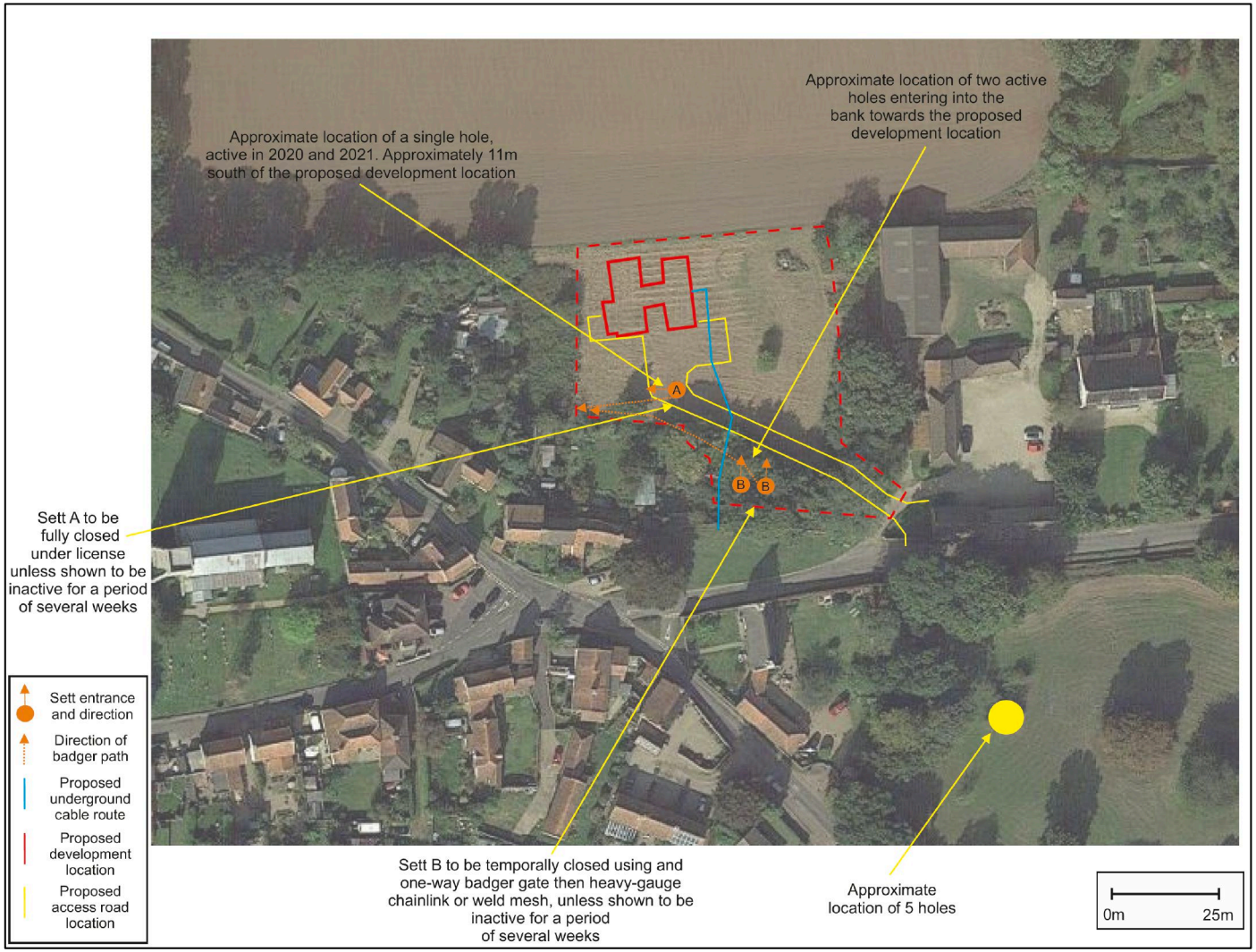

APPENDIX 6 PROPOSED BADGER GATING

Natural England Technical Information Note TIN025

Using one-way gates on badger sett entrances

Subsequent action

The period for which the gates must be left fitted to the entrances will be specified in the conditions of the licence. Other conditions and subsequent action, such as permanent blocking and proofing, will be detailed in your licence or covering letter.

Important note

This leaflet is for guidance only. If any advice given appears to contradict any conditions of a licence issued under the *Protection of Badgers Act 1992*, the conditions of the licence must take precedence.

Further information

In England, further advice on the use and construction of one-way gates and an application form for a licence under the Protection of Badgers Act can be obtained by contacting Wildlife Management and Licensing at:

Natural England, Wildlife Licensing Unit,
First Floor, Temple Quay House, 2 The Square,
Bristol, BS1 6EB
Tel: 0845 6014523 (local rate)
E-mail: **wildlife@naturalengland.org.uk**

A range of leaflets on wildlife topics is available online on the Natural England website at: **www.naturalengland.org.uk/ourwork/regulation/wildlife/default.aspx**

Natural England Technical Information Notes are available to download from the Natural England website: **www.naturalengland.org.uk**

For information on other Natural England publications contact the Natural England Enquiry Service on 0845 600 3078 or e-mail **enquiries@naturalengland.org.uk**

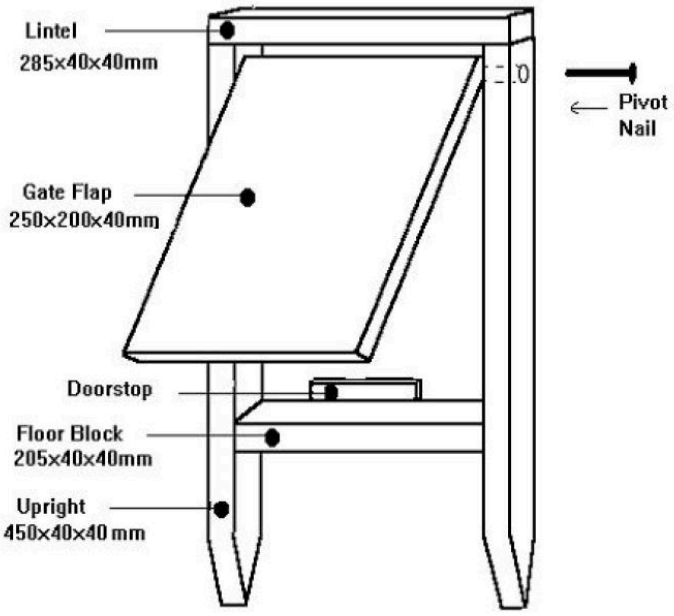

Figure 1

Page 2

APPENDIX 7 BAT FRIENDLY PLANTING

Which plants should I choose?

Bat-friendly gardeners should aim to plant a mixture of flowering plants, vegetables, trees and shrubs to encourage a diversity of insects, which in turn may attract different bat species. Flowers that bloom throughout the year, including both annuals and herbaceous perennials, are a good idea: night-flowering blossoms attract night-flying insects. Trees and shrubs provide food for insects and roosting opportunities for bats.

Approximate flowering periods are listed below, although they may vary according to area and weather conditions!

Flowers for borders

*Aubretia (spring to early summer)
*Candytuft (summer to autumn)
*Cherry pie (summer to autumn)
Corncockle
Cornflower
Corn marigold
Corn poppy
*Echinacea
English Bluebell (spring)
*Evening primrose (summer to autumn)
Field poppies (summer)
*Honesty (spring)
*Ice plant 'Pink lady' (early autumn)
Knapweed (summer to autumn)
Mallow (summer to autumn)
*Mexican aster (summer to autumn)
*Michaelmas daisy (summer to autumn)
*Night-scented stock (summer)
Ox-eye daisy (summer)
*Phacelia (summer to autumn)
*Poached egg plant (summer)
Primrose (spring)
Red campion (spring)
*Red valerian (summer to autumn)
Scabious (summer)
St John's wort (spring)
*Sweet William (summer)
*Tobacco plant
*Verbena (summer to autumn)
*Wallflowers (spring to early summer)
Wood forget-me-not (spring)
Yarrow (early summer)

Plants marked * are hybrids or exotics that may be useful in the garden

Herbs (both leaves & flowers are fragrant)

Angelica
Bergamot (summer to early autumn)
Borage (spring to early autumn)
Coriander (summer)
English marigolds
Fennel (summer to early autumn)
Feverfew (summer to autumn)
Hyssop (summer to early autumn)
Lavenders
Lemon balm
Marjoram (summer)
Rosemary (spring)
Sweet Cicely (spring to early summer)
Thyme (summer)

APPENDIX 8 GENERAL ECOLOGICAL MITIGATION/ ENHANCEMENT PLAN