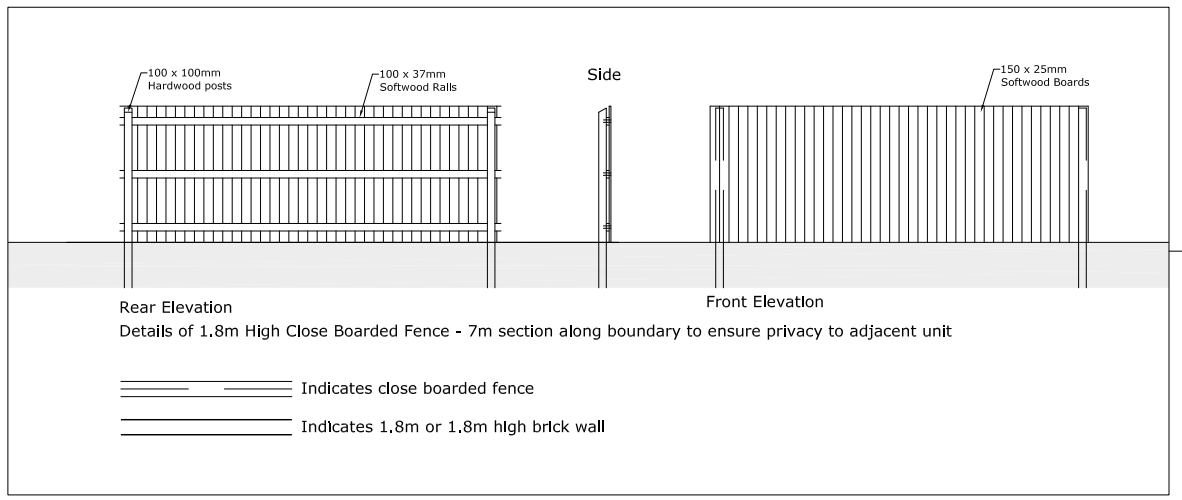

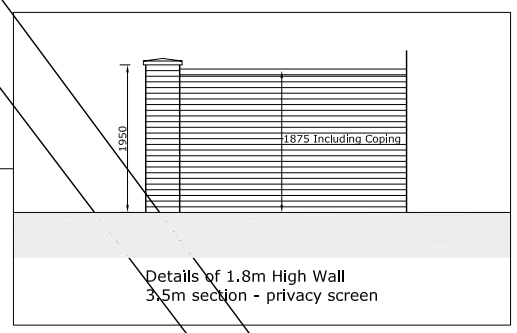

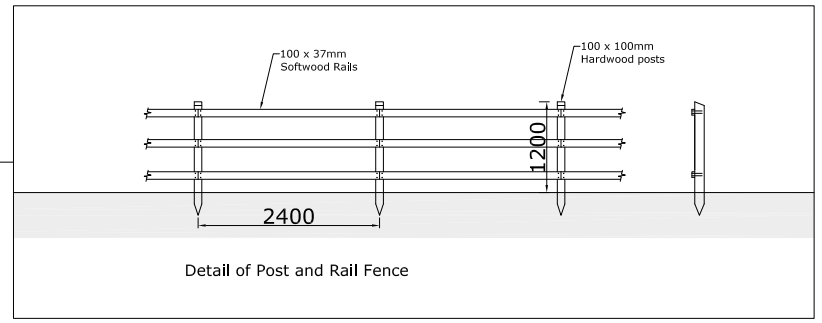

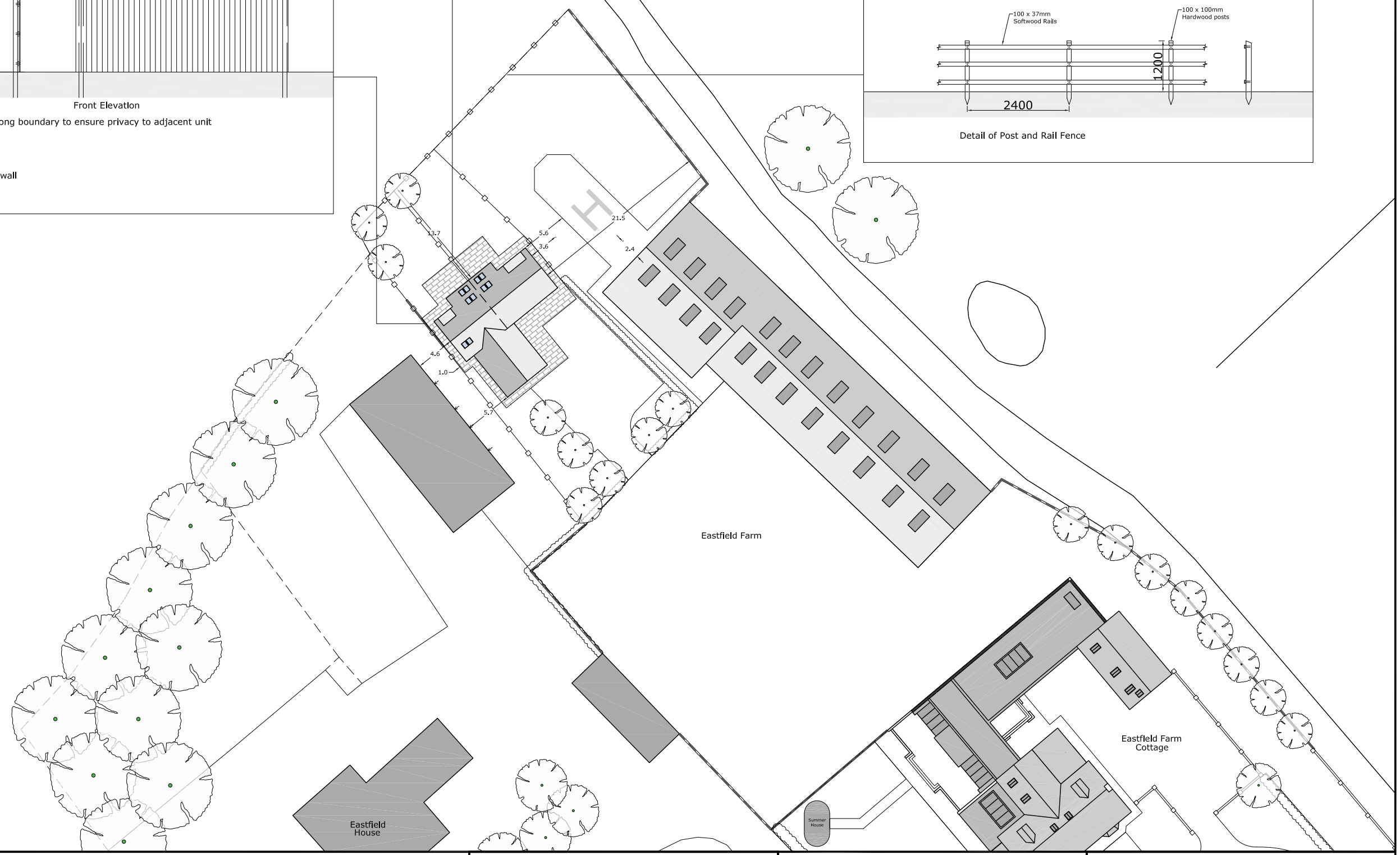

This drawing has been prepared for the purpose of obtaining Planning and or Building Regulation Approvals only. The contractor is responsible for taking and checking all dimensions on site prior to commencement and reporting back any discrepancies to the client and the architectural consultant. All materials specified on this drawing are to be used in strict accordance with manufacturers written instructions and current codes of practice. Variations to the specifications within these drawings or associated documents are at the contractor's own risk. This drawing is the copyright of DesignQube By Steven Brown Ltd and must not be reproduced without written consent.
© DesignQube By Steven Brown 2021

Mr and Mrs Fairburn	Client
Eastfield Farm Cottage, Manby Road, Stewton	Site Address
Proposed Holiday Cottages	Project Title
Proposed Boundary and Hardscaping	Drawing
SAB	Drawn By

1 : 500 1 : 100	Scale
August 2021	Date
DQ-482-DET1	Drawing Number
-	Revisions
A3	Original Paper Size

DESIGNQube
By Steven Brown
Architecture and Urban Design
www.designqube.co.uk
1 New Cottages, Hallington, Louth, Lincs, LN119QX
Tel: 01507 610375 - E-Mail: designqube@btconnect.com