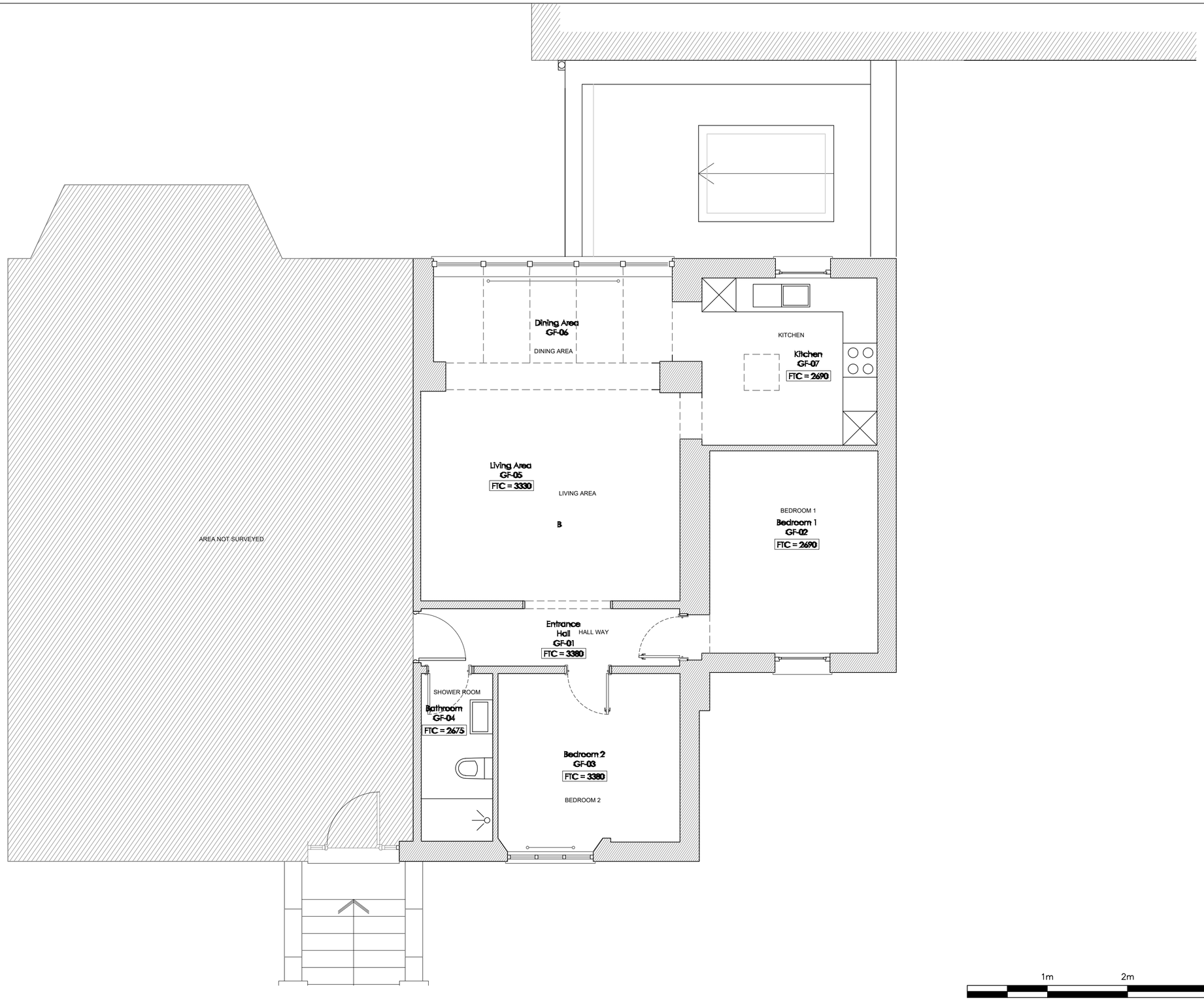

01 Ground Floor Existing Plan

1:50

1m 2m 5m

General Notes

1. Do not scale drawings. Dimensions govern.
2. All dimensions are in millimetres unless noted otherwise.
3. All dimensions shall be verified on site before proceeding with the work.
4. P+P ARCHITECTS shall be notified in writing of any discrepancies.
5. Any areas indicated on this sheet are approximate and indicative only.
6. All individual elements as shown on the drawing to be made from single jointless fabricated formwork sections, no on-site joints.

00	Title	dd/mm/yy		MP
Rev.	Reason For Issue	Date	Issue Reason	Chk

Design Consultant:
P+P ARCHITECTS
27 Milford Mews
SW16 2UA
London, UK

Project
Kings Avenue
SW4
London, UK

Client
Edward Sparrow

Title
Plan Existing

Project No.	Scale @ A2	Date	Originator	Number	Revision
000	1:50	20/07/21	MC	134-A10	01

$$$SYTIME$$$

01 Existing Elevation

1:50

1m 2m 5m

General Notes

1. Do not scale drawings. Dimensions govern.
2. All dimensions are in millimetres unless noted otherwise.
3. All dimensions shall be verified on site before proceeding with the work.
4. P+P ARCHITECTS shall be notified in writing of any discrepancies.
5. Any areas indicated on this sheet are approximate and indicative only.
6. All individual elements as shown on the drawing to be made from single jointless fabricated formwork sections, no on-site joints.

00	Title	dd/mm/yy		MP
Rev.	Reason For Issue	Date	Issue Reason	Chk

Design Consultant:
P+P ARCHITECTS
27 Milford Mews
SW16 2UA
London, UK

Project
Kings Avenue
SW4
London, UK

Client
Edward Sparrow

Title
Elevation Existing

Project No.	Scale @ A3	Date	Originator.	Number	Revision
000	1:50	20/07/21	MC	134-A20	01

$$$$SYTIME$$$$

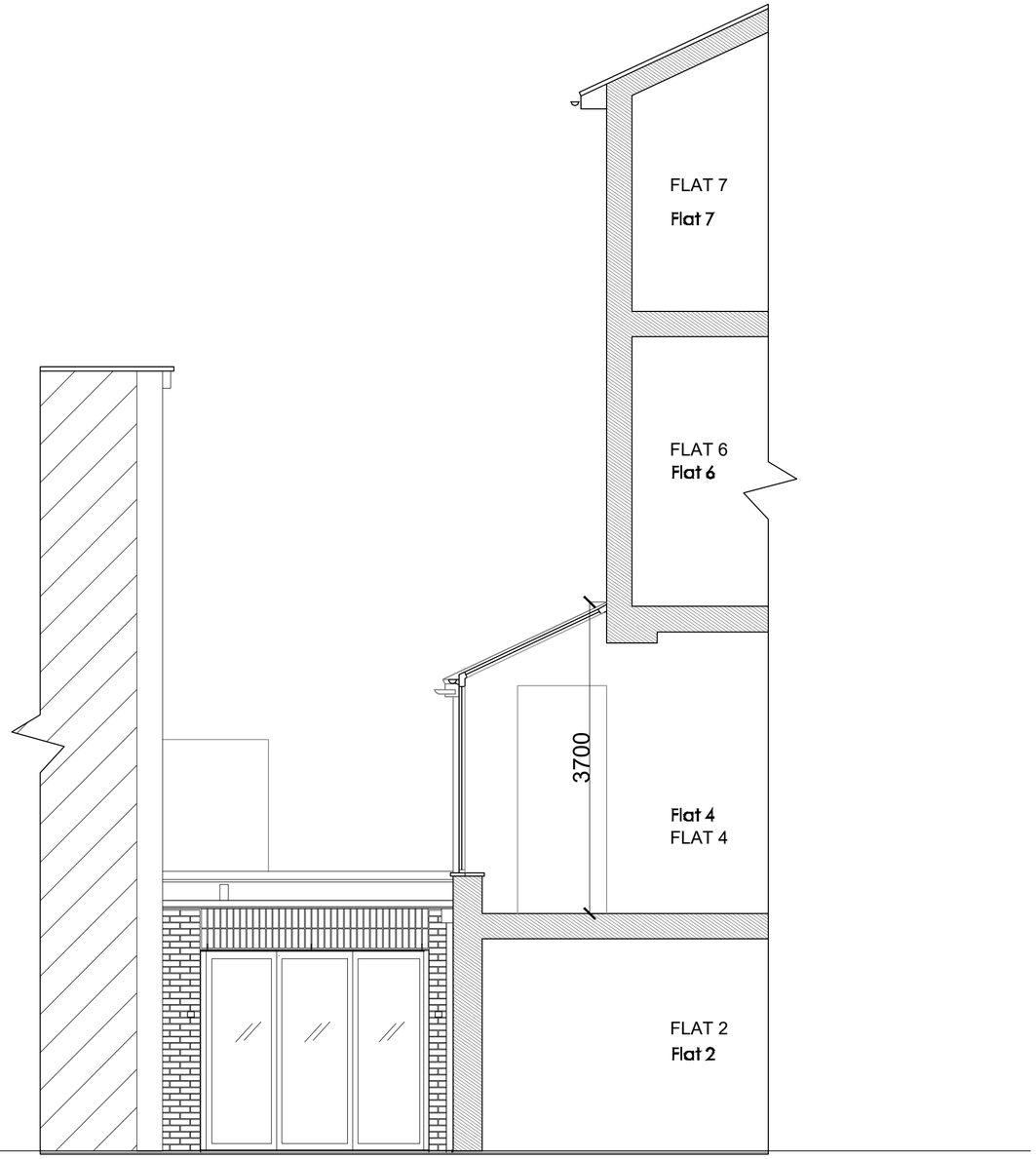

01 Existing Section

1:50

1m 2m 5m

General Notes

1. Do not scale drawings. Dimensions govern.
2. All dimensions are in millimetres unless noted otherwise.
3. All dimensions shall be verified on site before proceeding with the work.
4. P+P ARCHITECTS shall be notified in writing of any discrepancies.
5. Any areas indicated on this sheet are approximate and indicative only.
6. All individual elements as shown on the drawing to be made from single jointless fabricated formwork sections, no on-site joints.

00	Title	dd/mm/yy		MP
Rev.	Reason For Issue	Date	Issue Reason	Chk

Design Consultant:
P+P ARCHITECTS
27 Milford Mews
SW16 2UA
London, UK

Project
Kings Avenue
SW4
London, UK

Client
Edward Sparrow

Title
Section Existing

Project No.	Scale @ A3	Date	Originator	Number	Revision
000	1:50	20/07/21	MC	134-A30	01

$$$$YTIMES$$$

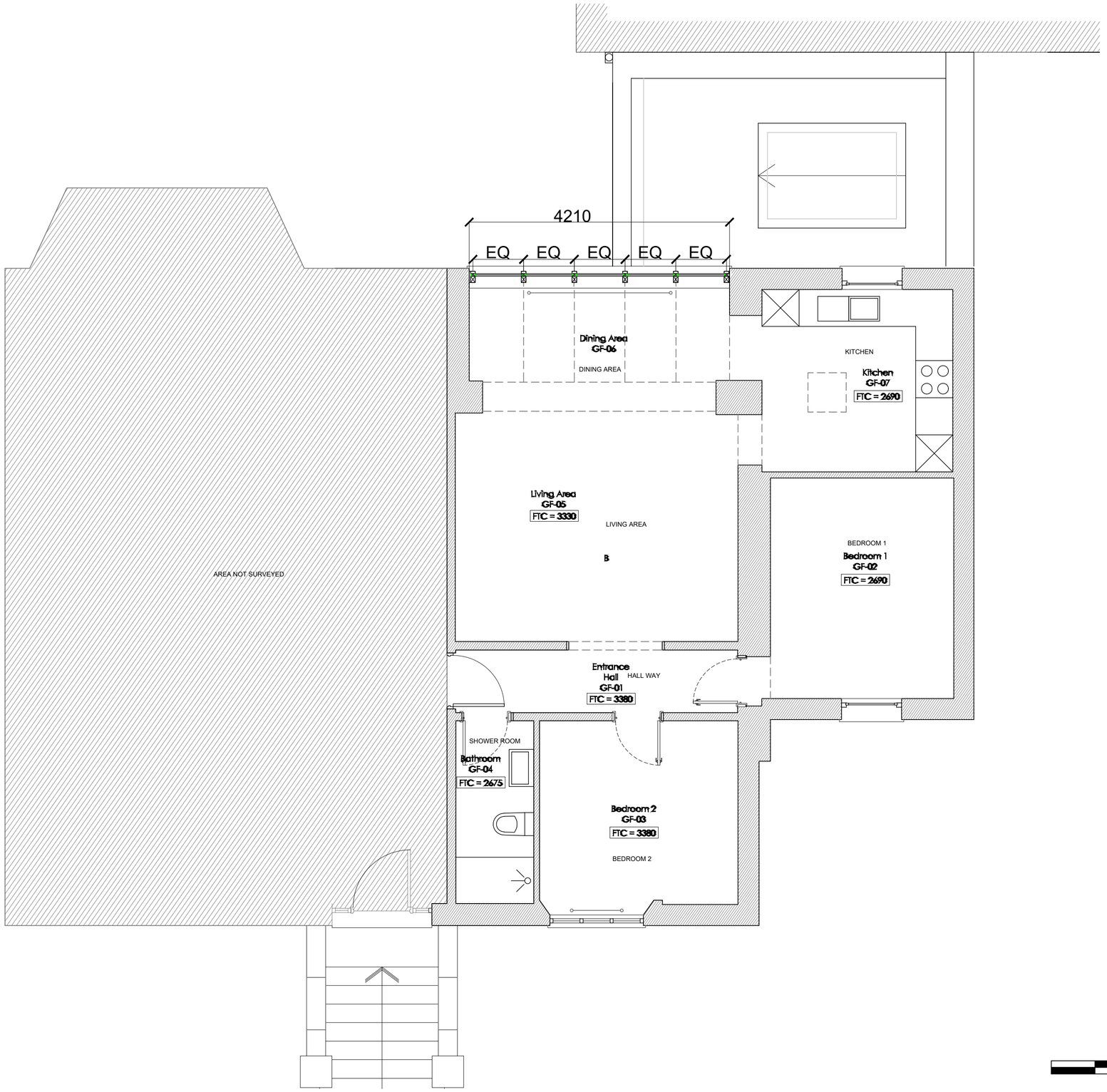

01 Proposed Plan

1:50

1m 2m 5m

General Notes

1. Do not scale drawings. Dimensions govern.
2. All dimensions are in millimetres unless noted otherwise.
3. All dimensions shall be verified on site before proceeding with the work.
4. P+P ARCHITECTS shall be notified in writing of any discrepancies.
5. Any areas indicated on this sheet are approximate and indicative only.
6. All individual elements as shown on the drawing to be made from single jointless fabricated formwork sections, no on-site joints.

00	Title	dd/mm/yy		MP
Rev.	Reason For Issue	Date	Issue Reason	Chk

Design Consultant:
P+P ARCHITECTS
27 Milford Mews
SW16 2UA
London, UK

Project
Kings Avenue
SW4
London, UK

Client
Edward Sparrow

Title
Ground Floor Demolition Plan

Project No.	Scale @ A2	Date	Originator	Number	Revision
000	1:50	20/07/21	MC	134-A50	01

$$$$YTIME$$$$

01 Proposed Elevation

1:50

1m 2m 5m

General Notes

1. Do not scale drawings. Dimensions govern.
2. All dimensions are in millimetres unless noted otherwise.
3. All dimensions shall be verified on site before proceeding with the work.
4. P+P ARCHITECTS shall be notified in writing of any discrepancies.
5. Any areas indicated on this sheet are approximate and indicative only.
6. All individual elements as shown on the drawing to be made from single jointless fabricated formwork sections, no on-site joints.

00	Title	dd/mm/yy		MP
Rev.	Reason For Issue	Date	Issue Reason	Chk

Design Consultant:
P+P ARCHITECTS
27 Milford Mews
SW16 2UA
London, UK

Project
Kings Avenue
SW4
London, UK

Client
Edward Sparrow

Title
Elevation proposal

Project No.	Scale @ A3	Date	Originator	Number	Revision
000	1:50	20/07/21	MC	134-A60	01

$$$$SYTIME$$$$

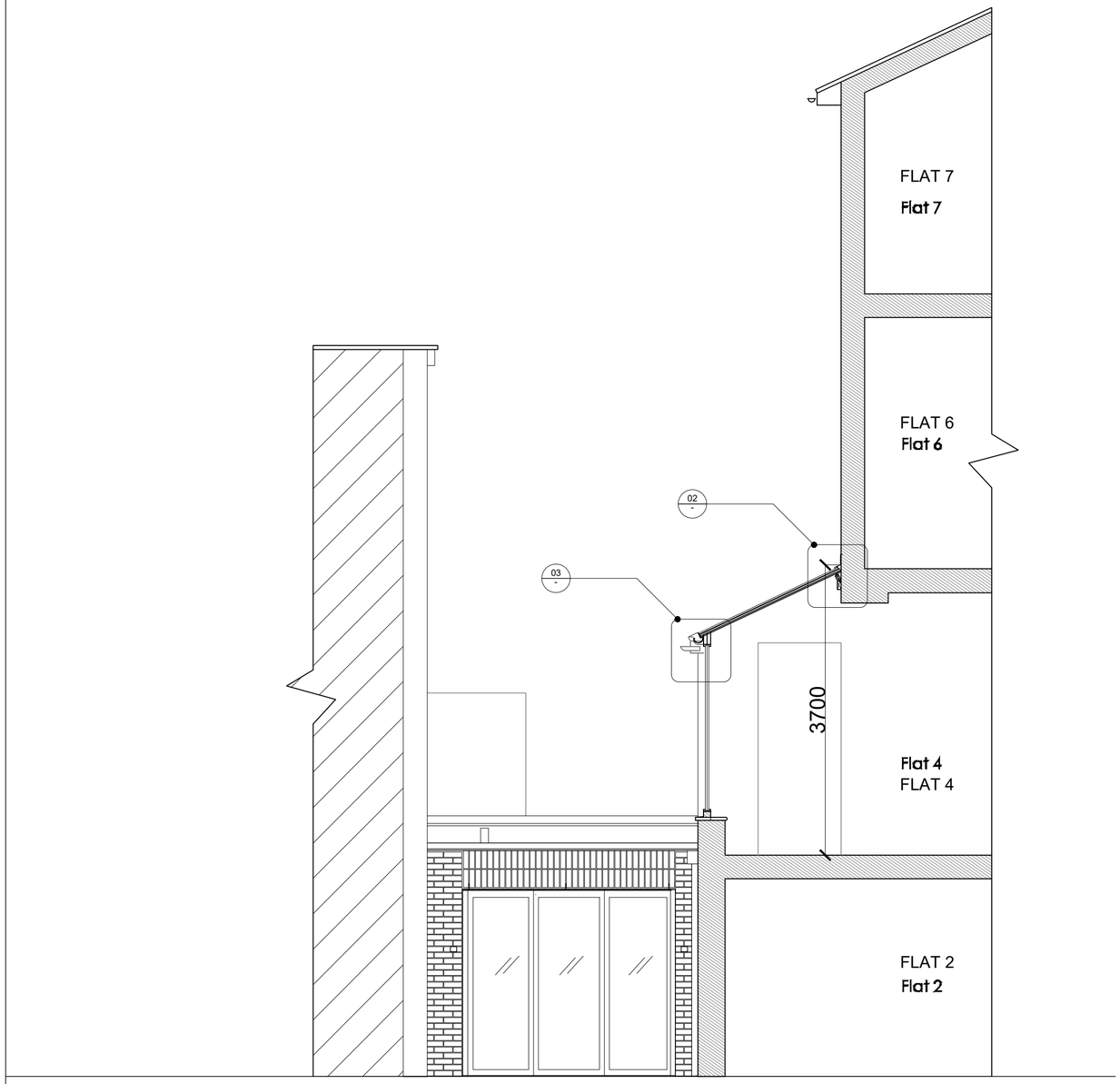

01 Proposed Section
1:50

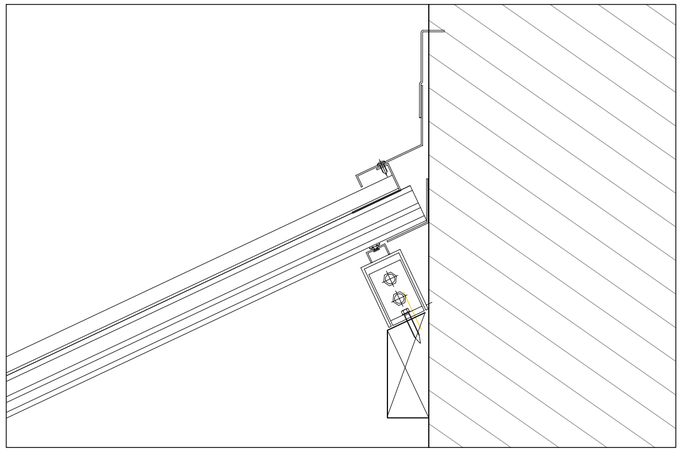

02 Head Detail
1:10

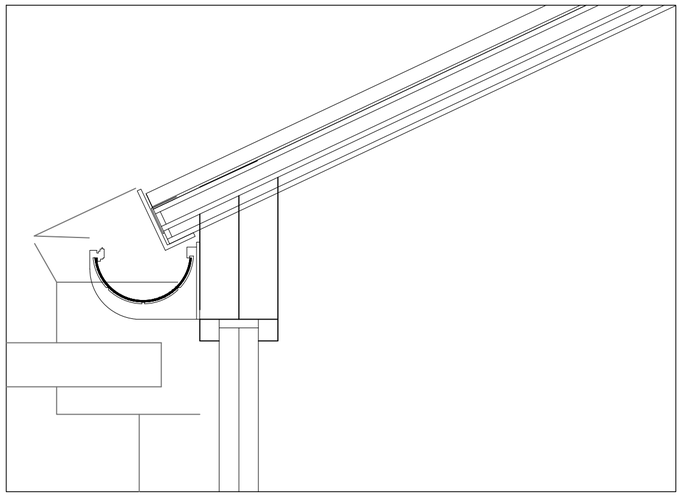

03 Gutter Detail
1:10

1m 2m 5m

General Notes
1. Do not scale drawings. Dimensions govern.
2. All dimensions are in millimetres unless noted otherwise.
3. All dimensions shall be verified on site before proceeding with the work.
4. P+P ARCHITECTS shall be notified in writing of any discrepancies.
5. Any areas indicated on this sheet are approximate and indicative only.
6. All individual elements as shown on the drawing to be made from single jointless fabricated formwork sections, no on-site joints.

Rev.	Reason For Issue	Date	Issue Reason	Chk
00	Title	dd/mm/yy		MP

Design Consultant:
P+P ARCHITECTS
27 Milford Mews
SW16 2UA
London, UK

Project
Kings Avenue
SW4 4EN
London, UK

Client
Edward Sparrow

Title
Section Proposed

Project No.	Scale @ A3	Date	Originator	Number	Revision
000	1:50	20/07/21	MC	134-A60	01

$$$$SYTIME$$$$