DAYLIGHT, SUNLIGHT & OVERSHADOWING

7 Station Approach

Produced by XCO2 for Woolbro Homes Ltd.

March 2021

XCO2
56 Kingsway Place, Sans Walk
London EC1R 0LU

+44 (0)20 7700 1000
mail@xco2.com
xco2.com

CONTENTS

	0.1	0.2	0.3				
Remarks	Draft	Draft	Draft				
Prepared by	DGB	LT/DGB	NH				
Checked by	SP	TK	HP				
Authorised by	RM	KM	KM				
Date	10/05/2019	01/04/2020	01/03/2021				
Project reference	9.186	9.186	9.186				

EXECUTIVE SUMMARY

The daylight, sunlight and overshadowing analysis indicates that there will not be a significant impact on surrounding properties arising from the proposed development at 7 Station Approach.

Daylight and Sunlight analysis was carried out for the proposed development at 7 Station Approach, Stoneleigh, located within the within the Borough of Epsom and Ewell. This report outlines the results of the analysis for the planning application, assessing the daylight and sunlight impacts on surrounding developments.

The methodology set out in this report is in accordance with BRE's "Site Layout Planning for Daylight and Sunlight, A Guide to Good Practice" by PJ Littlefair (2011) which is accepted as good practice by Planning Authorities.

The following assessments were carried out:

- Daylight: 25 Degree Line
- Daylight: Vertical Sky Component
- Daylight: No Sky Line
- Sunlight: Sunlight Access
- Sunlight: Sunlight Overshadowing

Computer modelling software was used to carry out the assessments. The model used was based on drawings and a 3D model provided by the design team together with desktop research on neighbouring properties.

DAYLIGHT ASSESSMENT

A total of 33 windows from buildings surrounding the site were highlighted as being in close proximity to, and facing the proposed development.

Daylighting levels for potentially affected windows of surrounding developments by the proposed development at 7 Station Approach were found to be acceptable.

In summary,

- 13 windows pass initial 25-degree line test
- 15 windows achieved VSCs greater than 27%;
- 1 window achieved relative VSC over 0.8 of its former value;
- The remaining 4 windows were found to belong to rooms that meet the no skyline test.

Overall, the development is not anticipated to have any notable impact on the daylight received by neighbouring properties.

SUNLIGHT ASSESSMENT

A total of 20 windows from buildings surrounding the site were assessed for sunlight access. The analysis indicated that all 20 windows satisfied the BRE criteria for annual probable sunlight hours (APSH) and winter probable sunlight hours (WPSH).

Therefore, the proposed development at 7 Station Approach is not considered to have any notable impact on sunlight access to windows of surrounding developments.

OVERSHADOWING ASSESSMENT

A solar access analysis was undertaken for a total of 3 amenity spaces for the full 24 hours on 21st of March. These amenity spaces are predicted to have a minimum of 2 hours of sunlight on 21 March over at least 50% of the assessed amenity space.

The proposed development is therefore not considered to have any significant impact on sunlight access to the amenity spaces surrounding the site.

Table 1: Daylight results summary.

Number of windows tested	33
Number of windows passing the 25° initial test	13
Number of windows with a VSC higher than 27%	15
Number of windows with a VSC of at least 0.8 of existing value	1
Number of windows that belong to rooms meeting the NSL test	4
Number of windows that do not meet any of the above criteria	0

Table 2: Sunlight results summary.

Total number of windows facing within 90° of due south	20
Number of south facing windows passing the 25° initial test	13
Number of south facing windows with APSH greater than 25% and WPSH greater than 5%, or of at least 0.8 of their former existing value	7
Number of south facing windows with less than 4% reduction in annual sunlight	0
Number of windows that do not meet any of the above criteria	0

INTRODUCTION

The site is located in suburban environment and the interpretation of the results requires careful consideration of the BRE guidance.

This report assesses the daylight, sunlight and overshadowing impacts the proposed new build residential development may have on the existing properties and open spaces surrounding the site.

The approach is based on the BRE's "*Site Layout Planning for daylight and sunlight, a Guide to good practice"* PJ Littlefair 2011, which is generally accepted as good practice by Town and Country Planning authorities.

It should be noted that although the numerical values stated by the BRE provide useful guidance to designers, consultants and planning officials, these are purely advisory and may vary depending on context. Dense urban areas, for example, may often experience greater site constraints when compared to low-rise suburban areas, and thus a high degree of obstruction is often unavoidable. Appendix F of the BRE document is dedicated to the use of alternative values and it also demonstrates the manner in which the criteria for skylight was determined for the summary given above, i.e. the need for 27% vertical sky component for adequate daylighting.

This figure of 27% was achieved using the following methodology: a theoretical road was created with two storey terraced houses upon either side, approximately twelve metres apart. The houses have windows at ground and first floor level, and a pitched roof with a central ridge. Thereafter, a reference point was taken at the centre of a ground floor window of one of the properties and a line was drawn from this point to the central ridge of the property on the other side of the road.

The angle of this line equated to 25 degrees (the 25 degrees referred to in the summaries given with reference to the criteria for skylight). This 25-degree line obstructs 13% of the totally unobstructed sky available, leaving a resultant figure of 27% which is deemed to give adequate daylighting. This figure of 27% is the recommended criteria referred to in this report. It will be readily appreciated that in an urban area, this kind of urban form and setting is unlikely and impractical.

Furthermore, the BRE guidance also focuses on 'relative change' which is likely to be exaggerated given the low-rise nature of the existing structures on site. Where there is more than a 20% reduction in VSC, this does not mean that the level of daylight will be unacceptable but, rather, that there may be a noticeable change in daylight levels to the occupants.

Therefore, given the location of the proposed development and the currently low-rise nature of the existing site, it is important to take into account that, although the 27% VSC target is the standard criterion available, it is not fully applicable to the development and that a lower VSC target is acceptable.

Additionally, where the relative VSC benchmark is not met, further analysis inspects the rooms connected to the windows assessed in order to determine if there is any noticeable loss in daylight, quantified by the percentage (%) of the room's working plane with a view of the sky as relative to 0.8 of its former value. The former value could refer either to the existing development in place or the mirror image buildings for properties with windows close to site boundaries.

SITE

The proposed development is a residential building located within the Borough of Epsom and Ewell. The proposed scheme involves the demolition of existing buildings on site and erection of 4-storey building.

Site analysis was carried out to identify any potential daylight and sunlight impacts on the surrounding development. Relevant properties tested in this report adjacent to the proposed development are annotated in the figure below.

The following neighbouring buildings were tested in detail:

- 2 Newbury Gardens
- 73 Stoneleigh Park Road
- 98 Stoneleigh Park Road
- 6 Station Approach

Figure 1: Site location and neighbouring buildings assessed.

METHODOLOGY

The assessment is based on guidelines set out in the BRE "Site Layout Planning for Daylight and Sunlight, A Guide to Good Practice" (2011).

DAYLIGHT

DAYLIGHT TO SURROUNDING WINDOWS

A plane is drawn at 25 degrees from the horizontal, at the centre of an existing window. If the new development intersects with this plane, the internal daylight levels of the surrounding windows may be reduced. When an obstruction of the 25-degree plane occurs, a more detailed assessment involving the Vertical Sky Component of the affected window would need to be carried out.

ABSOLUTE VERTICAL SKY COMPONENT (VSC)

The Vertical Sky Component is the ratio of the direct sky illuminance falling on the vertical wall at a reference point, to the simultaneous horizontal illuminance under an unobstructed sky. To maintain good levels of daylight, the Vertical Sky Component of a window needs to be 27% or greater. If the VSC is less than 27%, then a comparison of existing and proposed levels of VSC level would need to be calculated.

RELATIVE VERTICAL SKY COMPONENT

Good levels of daylighting can still be achieved if VSC levels are within 0.8 of their former value.

PERCENTAGE OF ROOM WITH VIEW OF THE SKY (NSL)

Rooms connected to the windows assessed will not experience a noticeable loss in daylight if the percentage (%) of the room's working plane with view of the sky is over 0.8 of its former value. The former value could refer either to the existing development in place or the mirror image buildings for properties with windows close to site boundaries.

SUNLIGHT

ACCESS TO SUNLIGHT (APSH)

The BRE test relates mainly to existing living room windows, although care should be taken to ensure that kitchens and bedrooms receive reasonable amounts of sunlight. Annual Probable Sunlight Hour (APSH) assessment is carried out when there is an obstruction within the 25-degree line and the window is facing within 90 degrees due south. The APSH assessment states that the existing living room window should receive at least:

- 25% of annual probable sunlight hours (APSH) throughout the year;
- 5% of annual probable sunlight hours during the winter months;
- not less than 80% of its former sunlight hours during either period;
- not more than a 4% reduction in sunlight received over the whole year (APSH).

The term 'annual probable sunlight hours' refers to the long-term average of the total of hours during a year in which direct sunlight reaches the unobstructed ground (when clouds are taken into account). The 'winter probable sunlight hours' is used to mean the same but only for the winter period (21 September – 21 March).

OVERSHADOWING

SUNLIGHT TO AMENITY SPACES

Open spaces should retain a reasonable amount of sunlight throughout the year. The BRE states that for an amenity space to "appear adequately sunlit throughout the year, at least half of the area should receive at least 2 hours of sunlight on 21 March". Where this is not achieved, the difference between the area achieving 2 hours of sun on 21 March should be no less than 0.8 times its former value.

DAYLIGHT ASSESSMENT

The analysis indicates that the proposed development is unlikely to have a significant impact on neighbouring windows in terms of daylight. The following subsections detail the findings for each neighbouring building individually.

2 NEWBURY GARDENS

This building is located to the west of the proposed development. Figure 2 shows the assessed windows.

The results indicate that out of the 8 windows analysed, 3 pass initial 25-degree line test, 4 received absolute VSCs higher than 27% with the proposed development in place and 1 window attained relative a VSC greater than 0.8 of the existing value. The table below summarises the findings.

Detailed daylight assessment results are presented in Appendix B.

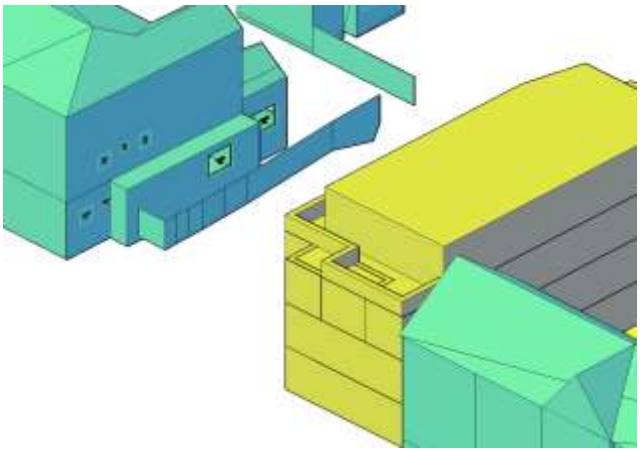

Figure 2: 2 Newbury Gardens windows.

Table 3: Daylight results summary for 2 Newbury Gardens.

Number of windows tested	8
Number of windows passing the 25° initial test	3
Number of windows with a VSC higher than 27%	4
Number of windows with a VSC of at least 0.8 of existing value	1
Number of windows that belong to rooms meeting the NSL test	0
Number of windows that do not meet any of the above criteria	0

73 STONELEIGH PARK ROAD

This building is located to the north-west of the proposed development. Figure 3 shows the assessed windows.

The results show that out of the 8 windows analysed, all 8 pass the initial 25-degree line test. The table below summarises the findings.

Detailed results are presented in Appendix B.

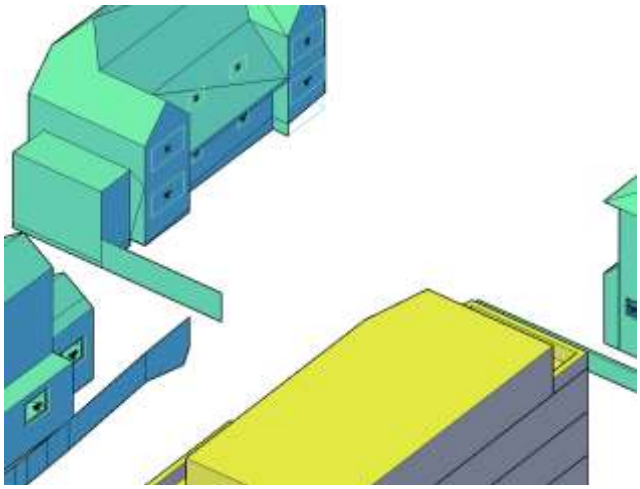

Figure 3: 73 Stoneleigh Park Road Windows

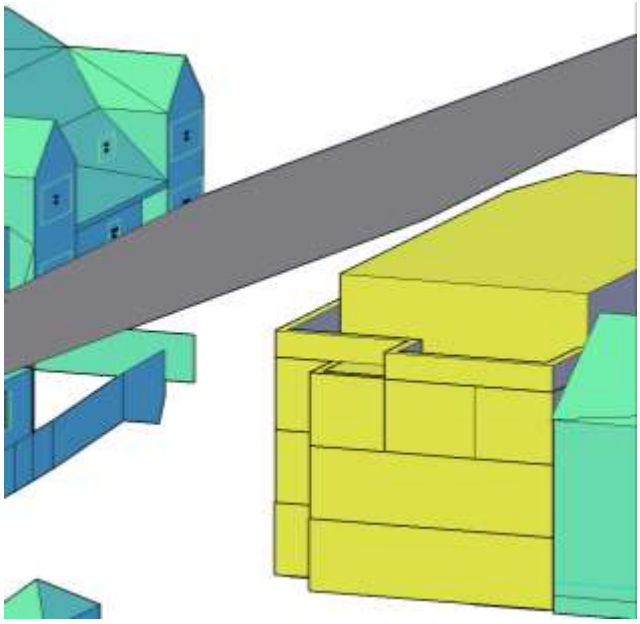

Figure 4: 73 Stoneleigh passing 25-degree line test.

Table 4: Daylight results summary for 73 Stoneleigh Park Road.

Number of windows tested	2
Number of windows passing the 25° initial test	8
Number of windows with a VSC higher than 27%	0
Number of windows with a VSC of at least 0.8 of existing value	0
Number of windows that belong to rooms meeting the NSL test	0
Number of windows that do not meet any of the above criteria	0

98 STONELEIGH PARK ROAD

This building is located to the north of the proposed development. Figure 4 shows the assessed windows.

The results show that out of the 5 windows analysed, 2 windows pass initial 25-degree test, and the remaining 3 windows all received absolute VSCs higher than 27%. The table below summarises the findings.

Detailed daylight assessment results are presented in Appendix B.

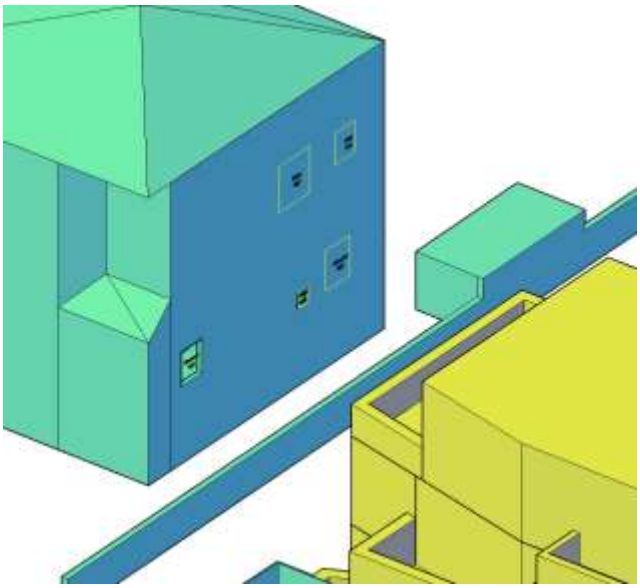

Figure 5 98: Stoneleigh Park Road Windows.

Table 5: Daylight results summary for 98 Stoneleigh Park Road.

Number of windows tested	5
Number of windows passing the 25° initial test	2
Number of windows with a VSC higher than 27%	3
Number of windows with a VSC of at least 0.8 of existing value	0
Number of windows that belong to rooms meeting the NSL test	0
Number of windows that do not meet any of the above criteria	0

6 STATION APPROACH

This building is located to the east of the proposed development. Figure 5 shows the assessed windows.

The results show that out of the 12 windows analysed, 8 windows received absolute VSCs higher than 27%, the remaining 4 windows were found to belong to rooms that meet the no skyline test. The table below summarises the findings.

Detailed daylight assessment results are presented in Appendix B. NSL test results are presented in Appendix D.

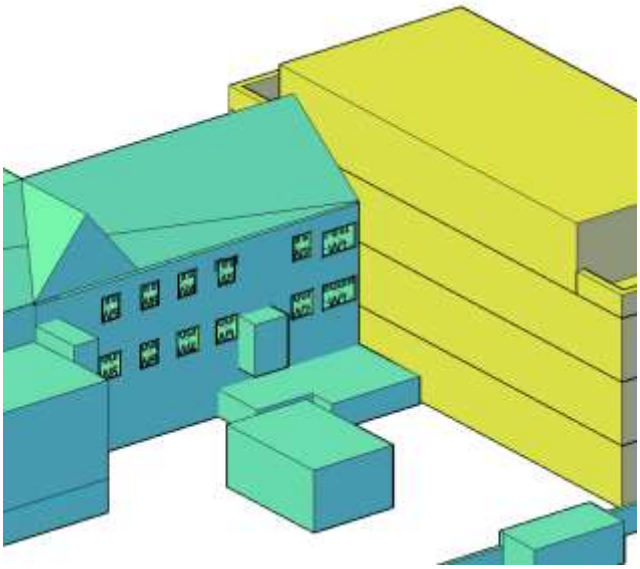

Figure 6: 6 Station Approach Windows.

Table 6: Daylight results summary for 6 Station Approach.

Number of windows tested	12
Number of windows passing the 25° initial test	0
Number of windows with a VSC higher than 27%	8
Number of windows with a VSC of at least 0.8 of existing value	0
Number of windows that belong to rooms meeting the NSL test	4
Number of windows that do not meet any of the above criteria	0

SUNLIGHT ASSESSMENT

The analysis indicates that the proposed development is unlikely to have a significant impact on neighbouring south facing windows in terms of sunlight.

The BRE guide states that:

> *"if a living room of an existing dwelling has a main window facing within 90° of due south, and any part of a new development subtends an angle of more than 25° to the horizontal measured from the centre of the window in a vertical section perpendicular to the window, then the sunlighting of the existing dwelling may be adversely affected"*

A total of 20 windows from buildings surrounding the site were highlighted as facing the development and within 90° of due south. These windows belong to the 2 Newbury Gardens, 73 Stoneleigh Park Road, 98 Stoneleigh Park Road included within this assessment.

The analysis indicated that all 20 windows assessed satisfied the BRE criteria for annual probable sunlight hours (APSH) and winter probable sunlight hours (WPSH).

The table below shows the results summary. The detailed results can be found in Appendix C - Detailed Sunlight Results.

Overall, the proposed development is not considered to have any notable impact on sunlight access to windows of surrounding developments.

Table 7: Sunlight results summary.

Total number of windows facing within 90° of south	**20**
Number of south facing windows passing the 25° initial test	13
Number of south facing windows with APSH greater than 25% and WPSH greater than 5%, or of at least 0.8 of their former existing value	7
Number of south facing windows with less than 4% reduction in annual sunlight	0
Number of windows that do not meet any of the above criteria	0

OVERSHADOWING ASSESSMENT

The analysis indicates that the proposed development is unlikely to have a significant impact on the sunlight received by neighbouring amenity spaces.

A review of the site plan showed that there are three amenity space in close proximity to the proposed development, as shown in the figure below. A Solar Access Analysis was undertaken on these amenity areas for the full 24 hours on 21 March as set out by the BRE.

The image shows that at least 50% of the analysed space will receive more than 2 hours of sunlight on 21 March under proposed conditions, meeting the BRE requirements for overshadowing.

The proposed development is not considered to have any significant impact on sunlight access to neighbouring amenity and open spaces.

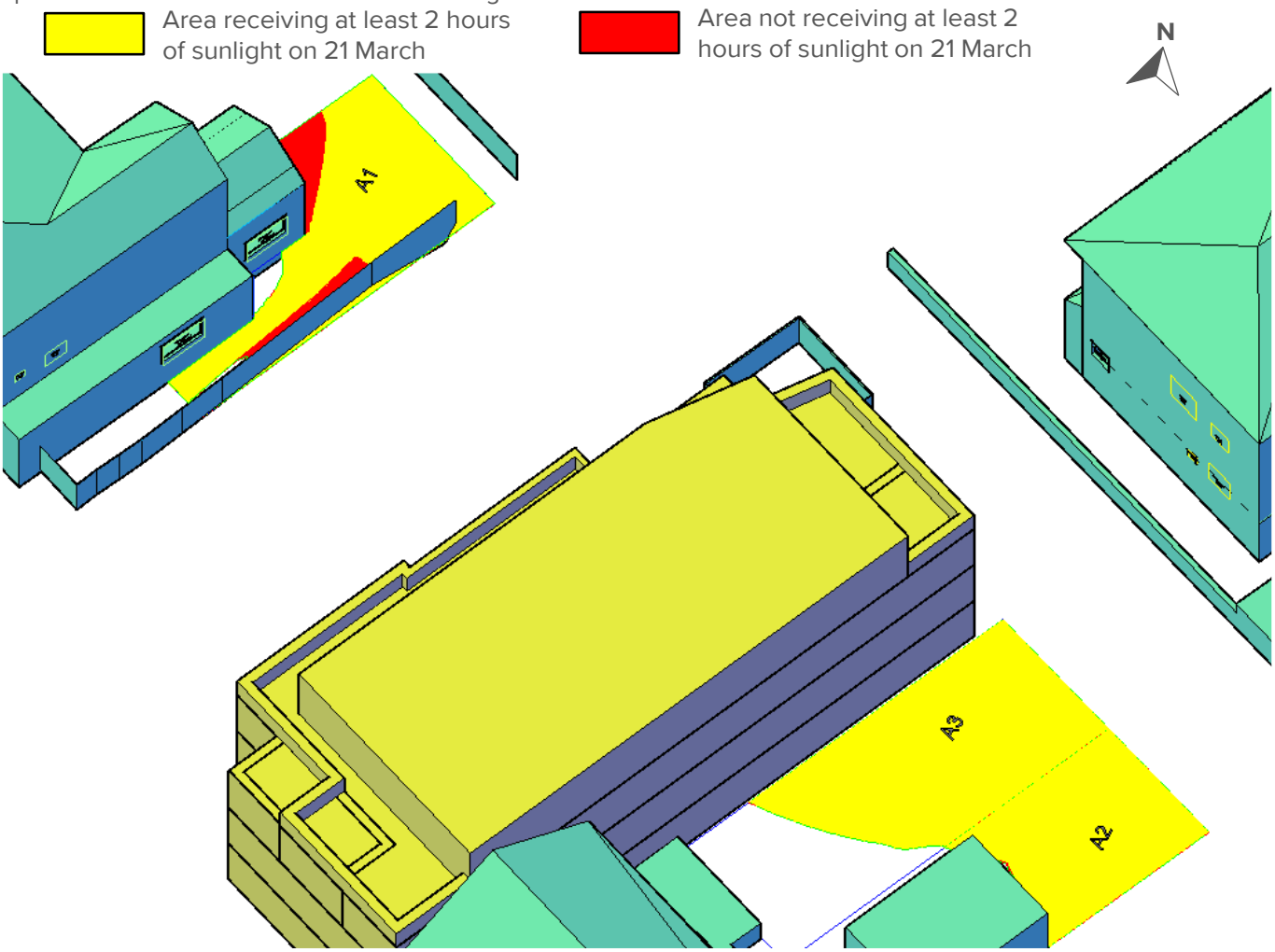

Figure 7: Amenity spaces in close proximity to the proposed development site.

Table 8: Amenity overshadowing results.

Amenity Ref.	Area (m^2)	Proposed Lit Area (m^2)	Proposed Lit Area (%)	Existing Lit Area (m^2)	Existing Lit Area (%)	Proposed to Existing Ratio	Comments
A1	68.5	50	73%	61.4	90%	0.73	Meets BRE Criteria
A2	56.7	43.2	76%	43.3	76%	1.00	Meets BRE Criteria
A3	98.8	66.4	67%	66.4	67%	1.00	Meets BRE Criteria

CONCLUSION

The daylight, sunlight and overshadowing analysis indicates that there will not be a significant impact on surrounding properties arising from the proposed development at 7 Station Approach.

DAYLIGHT ASSESSMENT

A total of 33 windows from buildings surrounding the site were highlighted as being in close proximity to, and facing the proposed development.

Daylighting levels for potentially affected windows of surrounding developments by the proposed development at 7 Station Approach were found to be acceptable.

In summary,

- 13 windows pass initial 25-degree line test
- 15 windows achieved VSCs greater than 27%;
- 1 window achieved relative VSC over 0.8 of its former value;
- The remaining 4 windows were found to belong to rooms that meet the no skyline test.

Overall, the development is not anticipated to have any notable impact on the daylight received by neighbouring properties.

SUNLIGHT ASSESSMENT

A total of 20 windows from buildings surrounding the site were assessed for sunlight access. The analysis indicated that all 20 windows satisfied the BRE criteria for annual probable sunlight hours (APSH) and winter probable sunlight hours (WPSH).

Therefore, the proposed development at 7 Station Approach is not considered to have any notable impact on sunlight access to windows of surrounding developments.

OVERSHADOWING ASSESSMENT

A solar access analysis was undertaken for a total of 3 amenity spaces for the full 24 hours on 21st of March. These amenity spaces are predicted to have a minimum of 2 hours of sunlight on 21 March over at least 50% of the assessed amenity space.

The proposed development is therefore not considered to have any significant impact on sunlight access to the amenity spaces surrounding the site

APPENDIX A - WINDOW REFERENCE

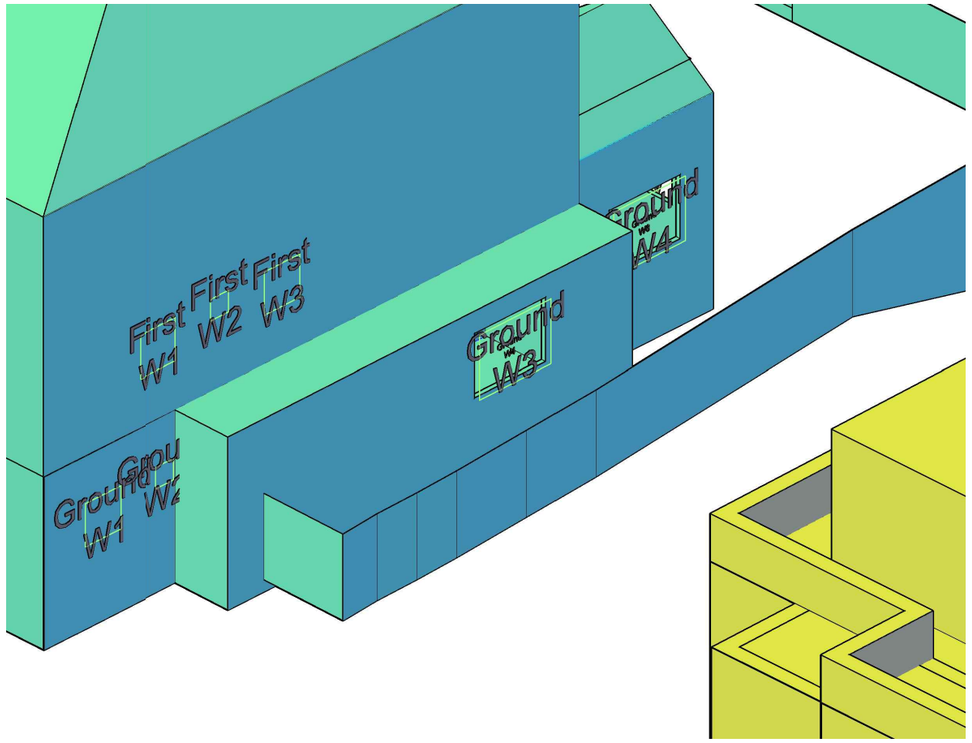

2 Newbury Gardens

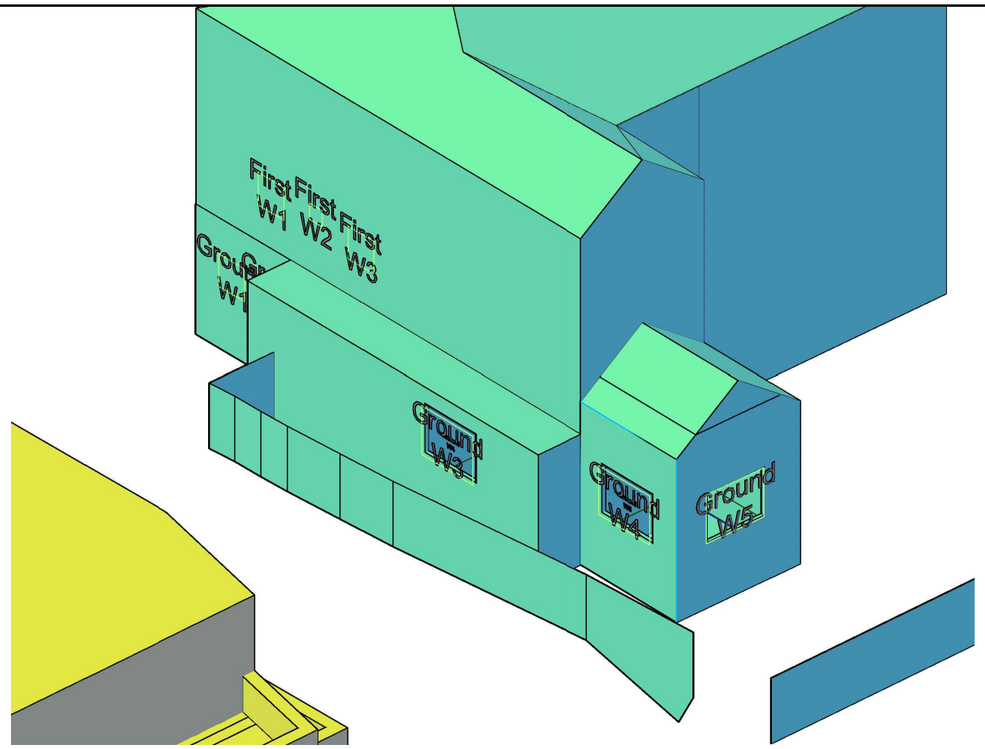

2 Newbury Gardens

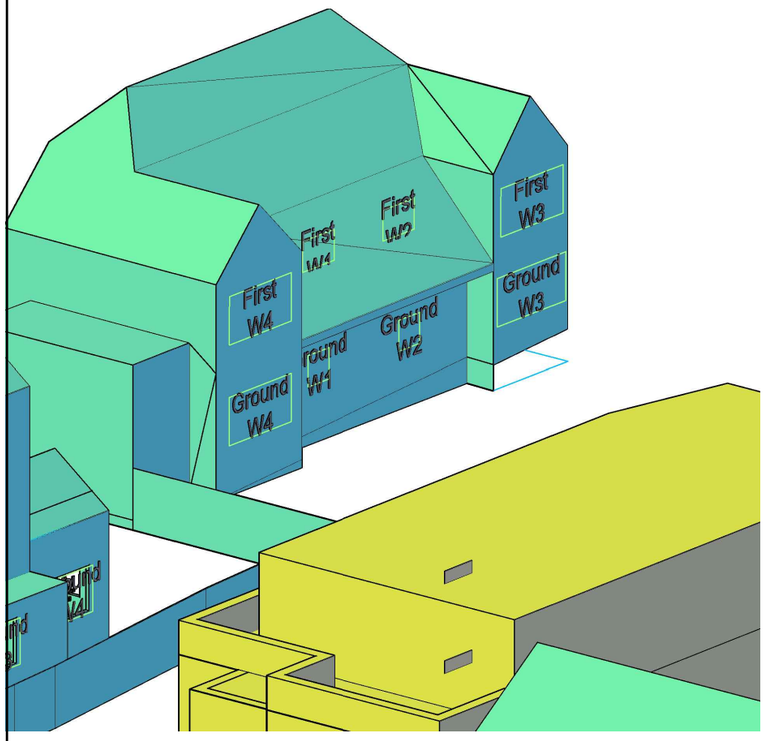

73 Stoneleigh Park Road

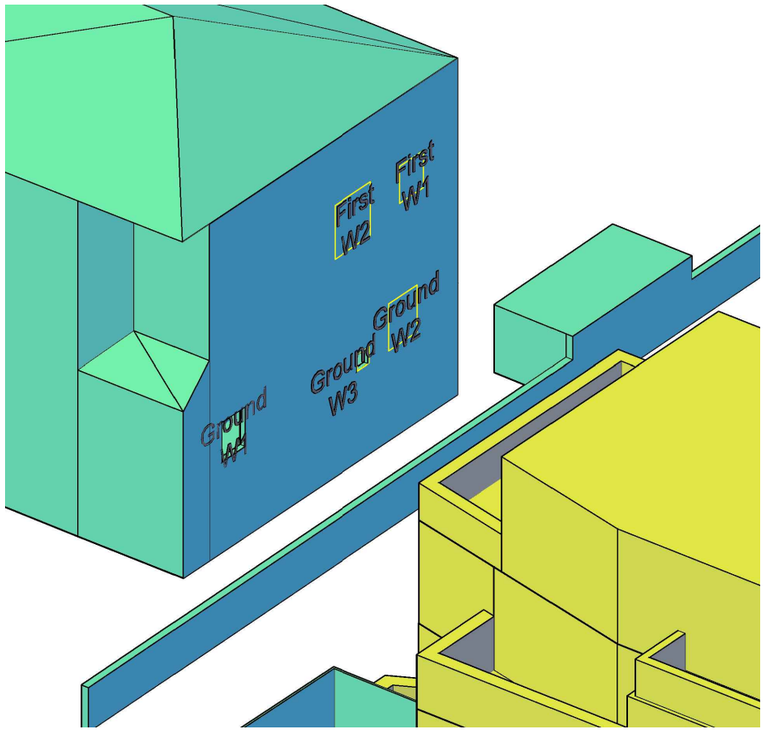

98 Stoneleigh Park Road

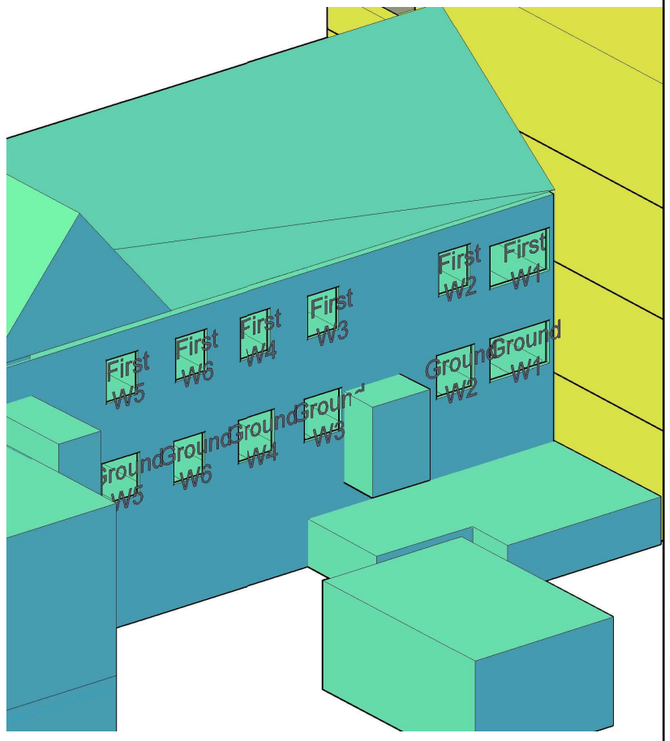

6 Station Approach

Notes

Rev	Date	Description	Chk'd	Appr
01	26.02.21	Window Reference Surrounding	HP	KM

ISSUE TYPE

XCO2
The Gymnasium,
56 Kingsway Place,
Sans Walk, London
EC1R 0LU
+44 (0) 20 7700 1000
mail@xco2.com
www.xco2.com

Client
Woolbro Homes Limited

Architect
MatchBox Architects

Project
7 Station Approach

Title
Window Reference for neighbouring buildings

Scale@A3	Drawn	Checked	Date
N.T.S	NH	HP	26.02.21

Drawing Number	Revision
9186-01-001	01

APPENDIX B - DETAILED DAYLIGHT RESULTS

Building	Floor	Window no.	25/45-degree plane test	VSC tests			NSL tests			Comments
				Proposed VSC 27%?	Existing VSC (%)	Relative VSC >0.8?	Proposed NSL (%)	Existing NSL (%)	Relative NSL >0.8?	
2 Newbury Gardens	Ground	W1	Further testing required	>27%	-	-	-	-	-	Pass
2 Newbury Gardens	Ground	W2	Further testing required	23.2%	24.7%	0.94	-	-	-	Pass
2 Newbury Gardens	Ground	W3	Further testing required	>27%	-	-	-	-	-	Pass
2 Newbury Gardens	Ground	W4	Further testing required	>27%	-	-	-	-	-	Pass
2 Newbury Gardens	Ground	W5	Further testing required	>27%	-	-	-	-	-	Pass
2 Newbury Gardens	First	W1	Pass	-	-	-	-	-	-	Pass
2 Newbury Gardens	First	W2	Pass	-	-	-	-	-	-	Pass
2 Newbury Gardens	First	W3	Pass	-	-	-	-	-	-	Pass
73 Stoneleigh Park Rd	Ground	W1	Pass	-	-	-	-	-	-	Pass
73 Stoneleigh Park Rd	Ground	W2	Pass	-	-	-	-	-	-	Pass
73 Stoneleigh Park Rd	Ground	W3	Pass	-	-	-	-	-	-	Pass

Building	Floor	Window no.	25/45-degree plane test	VSC tests			NSL tests			Comments
				Proposed VSC 27%?	Existing VSC (%)	Relative VSC >0.8?	Proposed NSL (%)	Existing NSL (%)	Relative NSL >0.8?	
73 Stoneleigh Park Rd	Ground	W4	Pass	-	-	-	-	-	-	Pass
73 Stoneleigh Park Rd	First	W1	Pass	-	-	-	-	-	-	Pass
73 Stoneleigh Park Rd	First	W2	Pass	-	-	-	-	-	-	Pass
73 Stoneleigh Park Rd	First	W3	Pass	-	-	-	-	-	-	Pass
73 Stoneleigh Park Rd	First	W4	Pass	-	-	-	-	-	-	Pass
98 Stoneleigh Park Road	Ground	W1	Further testing required	>27%	-	-	-	-	-	Pass
98 Stoneleigh Park Road	Ground	W2	Further testing required	>27%	-	-	-	-	-	Pass
98 Stoneleigh Park Road	Ground	W3	Further testing required	>27%	-	-	-	-	-	Pass
98 Stoneleigh Park Road	First	W1	Pass	-	-	-	-	-	-	Pass
98 Stoneleigh Park Road	First	W2	Pass	-	-	-	-	-	-	Pass
6 Station Approach	Ground	W1	Further testing required	19.6%	34.5%	0.57	98%	99%	0.99	Belongs to room which passes NSL test
6 Station Approach	Ground	W2	Further testing required	22.3%	33.8%	0.66	97&	99%	0.98	Belongs to room which passes NSL test

Building	Floor	Window no.	25/45-degree plane test	VSC tests			NSL tests			Comments
				Proposed VSC 27%?	Existing VSC (%)	Relative VSC >0.8?	Proposed NSL (%)	Existing NSL (%)	Relative NSL >0.8?	
6 Station Approach	Ground	W3	Further testing required	>27%	-	-	-	-	-	Pass
6 Station Approach	Ground	W4	Further testing required	>27%	-	-	-	-	-	Pass
6 Station Approach	Ground	W5	Further testing required	>27%	-	-	-	-	-	Pass
6 Station Approach	Ground	W6	Further testing required	>27%	-	-	-	-	-	Pass
6 Station Approach	First	W1	Further testing required	20.9%	35.8%	0.58	99%	99%	1.00	Belongs to room which passes NSL test
6 Station Approach	First	W2	Further testing required	25.3%	35.4%	0.72	98%	98%	1.00	Belongs to room which passes NSL test
6 Station Approach	First	W3	Further testing required	>27%	-	-	-	-	-	Pass
6 Station Approach	First	W4	Further testing required	>27%	-	-	-	-	-	Pass
6 Station Approach	First	W5	Further testing required	>27%	-	-	-	-	-	Pass
6 Station Approach	First	W6	Further testing required	>27%	-	-	-	-	-	Pass

APPENDIX C - DETAILED SUNLIGHT RESULTS

Building	Floor	Window no.	Orientation	25/45-degree plane test	APSH test			WPSH test			Total reduction< 4%?	Comments
					Proposed APSH >25%?	Existing APSH (%)	Relative APSH >0.8?	Proposed WPSH >5%?	Existing WPSH (%)	Relative WPSH >0.8?		
2 Newbury Gardens	Ground	W1	South	Further testing required	>25%	-	-	>5%	-	-	-	Pass
2 Newbury Gardens	Ground	W2	South	Further testing required	>25%	-	-	>5%	-	-	-	Pass
2 Newbury Gardens	Ground	W3	South	Further testing required	>25%	-	-	>5%	-	-	-	Pass
2 Newbury Gardens	Ground	W4	South	Further testing required	>25%	-	-	>5%	-	-	-	Pass
2 Newbury Gardens	Ground	W5	North	-	-	-	-	-	-	-	-	-
2 Newbury Gardens	First	W1	South	Pass	-	-	-	-	-	-	-	Pass
2 Newbury Gardens	First	W2	South	Pass	-	-	-	-	-	-	-	Pass
2 Newbury Gardens	First	W3	South	Pass	-	-	-	-	-	-	-	Pass
73 Stoneleigh Park Rd	Ground	W1	South	Pass	-	-	-	-	-	-	-	Pass
73 Stoneleigh Park Rd	Ground	W2	South	Pass	-	-	-	-	-	-	-	Pass

Building	Floor	Window no.	Orientation	25/45-degree plane test	APSH test			WPSH test			Total reduction< 4%?	Comments
					Propose d APSH >25%?	Existing APSH (%)	Relative APSH >0.8?	Proposed WPSH >5%?	Existing WPSH (%)	Relative WPSH >0.8?		
73 Stoneleigh Park Rd	Ground	W3	South	Pass	-	-	-	-	-	-	-	Pass
73 Stoneleigh Park Rd	Ground	W4	South	Pass	-	-	-	-	-	-	-	Pass
73 Stoneleigh Park Rd	First	W1	South	Pass	-	-	-	-	-	-	-	Pass
73 Stoneleigh Park Rd	First	W2	North	Pass	-	-	-	-	-	-	-	-
73 Stoneleigh Park Rd	First	W3	South	Pass	-	-	-	-	-	-	-	Pass
73 Stoneleigh Park Rd	First	W4	South	Pass	-	-	-	-	-	-	-	Pass
98 Stoneleigh Park Road	Ground	W1	South	Further testing required	>25%	-	-	>5%	-	-	-	Pass
98 Stoneleigh Park Road	Ground	W2	South	Further testing required	>25%	-	-	>5%	-	-	-	Pass
98 Stoneleigh Park Road	Ground	W3	South	Further testing required	>25%	-	-	>5%	-	-	-	Pass
98 Stoneleigh Park Road	First	W1	South	Pass	-	-	-	-	-	-	-	Pass
98 Stoneleigh Park Road	First	W2	South	Pass	-	-	-	-	-	-	-	Pass
6 Station Approach	Ground	W1	North	-	-	-	-	-	-	-	-	-

Building	Floor	Window no.	Orientation	25/45-degree plane test	APSH test			WPSH test			Total reduction< 4%?	Comments
					Propose d APSH >25%?	Existing APSH (%)	Relative APSH >0.8?	Proposed WPSH >5%?	Existing WPSH (%)	Relative WPSH >0.8?		
6 Station Approach	Ground	W2	North	-	-	-	-	-	-	-	-	-
6 Station Approach	Ground	W3	North	-	-	-	-	-	-	-	-	-
6 Station Approach	Ground	W4	North	-	-	-	-	-	-	-	-	-
6 Station Approach	Ground	W5	North	-	-	-	-	-	-	-	-	-
6 Station Approach	Ground	W6	North	-	-	-	-	-	-	-	-	-
6 Station Approach	First	W1	North	-	-	-	-	-	-	-	-	-
6 Station Approach	First	W2	North	-	-	-	-	-	-	-	-	-
6 Station Approach	First	W3	North	-	-	-	-	-	-	-	-	-
6 Station Approach	First	W4	North	-	-	-	-	-	-	-	-	-
6 Station Approach	First	W5	North	-	-	-	-	-	-	-	-	-
6 Station Approach	First	W6	North	-	-	-	-	-	-	-	-	-

XCO2
56 Kingsway Place, Sans Walk
London EC1R 0LU

+44 (0)20 7700 1000
mail@xco2.com
xco2.com