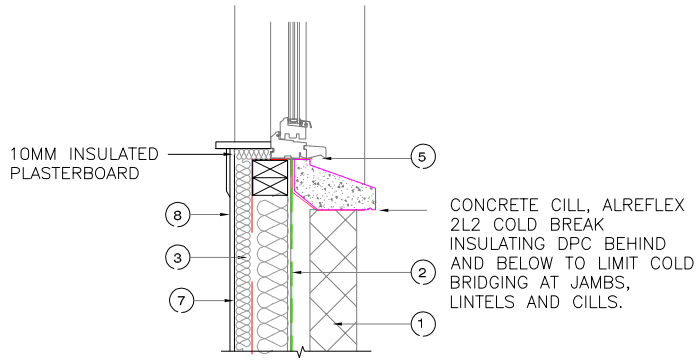

WINDOW CILL
Scale 1:20

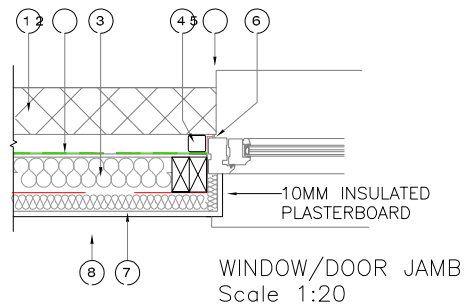

WINDOW/DOOR JAMB
Scale 1:20

VAPOUR CONTROL LAYERS
– NOT TO BE PERFORATED BY LIGHT FITTINGS.
– TO BE LAPPED AND TAPED WITH WALL
– TO BE LAPPED AND TAPED AT JUNCTIONS, AND UP ROOFLIGHT REVEALS, TO PROVIDE A CONTINUOUS BARRIER.

SERVICES PENETRATING VAPOUR CONTROL LAYERS TO BE SEALED WITH FLEXIBLE SEALANT OR TAPE, AS PER MANUFACTURERS GUIDELINES, TO ENSURE ALL HOLES ARE SEALED.

FLOOR / GROUND JUNCTION:
TIMBER FRAME LEVEL TO START AT 150MM ABOVE EXTERNAL GROUND LEVEL, FIXED TO 100MM BLOCKWORK. EXTERNAL DPC TO BE A MINIMUM OF 150MM ABOVE EXTERNAL GROUND LEVEL.

DETAILS

1 – FACING BRICK/BLOCK WORK WITH ROUGHCAST

2 – BREATHER MEMBRANE

3 – TIMBER FRAME WITH INSULATION [SEE SPEC]

4 – INSULATED CAVITY CLOSER – THERMABATE 50MM, OR EQUAL AND APPROVED

5 – DPC TO ALL OPENINGS AND ABUTMENTS

6 – SEALANT

7 – 1200 GUAGE VISQUEEN VAPOUR BARRIER

8 – 12.5MM GYPROC PLASTERBOARD

CEILING
NO WORKS ARE PROPOSED TO THE EXISTING CEILING. THE EXISTING CEILING IS FINISHED WITH 2 LAYERS OF 12.5MM PLASTERBOARD TO ACHIEVE A MINIMUM 43 DB RW AND A MINIMUM OF 250MM GLASSWOOL BETWEEN THE EXISTING JOIST.

ROOF U–VALUE 0.15 W/M2K (PITCHED ROOF)
ROOF VOID AREA TO BE INSULATED WITH EARTHWOOL LOFT ROLL 44 100 BETWEEN JOIST AND FURTHER 200 OVER JOIST. JOIST TO BE 100MM DEEP AT 600MM CRS FINISHED WITH 12.5MM PLASTERBOARD AND VAPOUR CONTROL LAYER ABOVE THE PLASTERBOARD. EXISTING CONTINUES DRY RIDGE VENT SYSTEM EQUIVALENT TO 5,000MM² 2 IS IN PLACE AND EXISTING CONTINUES SOFFIT VENTILATION IN PLACE PROVIDING 25,000MM² FREE AREA ALONG FULL LENGTH. EAVES RAFTER ROLL BY MARLEY OR EQUAL TO BE PROVIDED TO MAINTAIN A 50MM AIR GAP AT SOFFIT AND RAFTER ENDS.

SUBSTRUCTURE & SUPERSTRUCTURE WALL– U' VALUE = 0. 21W/M2K (NEW WALL BELOW WINDOW)
SUBSTRUCTURE TO BE 100MM BLOCK WORK EXTERNAL LEAF, 60MM CLEAR CAVITY AND 100MM INNER LEAF. BLOCK WORK TO BE 7N/MM2. CAVITY TO BE FILLED BELOW GROUND LEVEL WITH LEAN CONCRETE SLOPED TO FACE EXT. CAVITY WEEP VENTS FITTED AT 900MM CRS AT GROUND LEVEL. SUPERSTRUCTURE TO BE FACING BRICK OUTER LEAF TO MATCH EXISTING AND START TWO COURSES BELOW GROUND LEVEL.

NEW WALL BELOW SILL TO BE FACING BRICK TO MATCH EXISTING, 50MM CAVITY, LOADBEARING TIMBER FRAME INTERNAL LEAF COMPRISING OF TYVEK BREATHER PAPER FITTED TO MANUFACTURERS RECOMMENDATIONS ON 9MM WBP PLYWOOD OR OSB BOARD ON 100 X 47 TREATED STUDS (STRENGTH CLASS TO BS 5268: PART 2, SC3) AT MAX. 600CRS. STUDS TO BE PACKED WITH 80MM CELOTEX FR 5000 20MM GAP FINISHED WITH 25MM CELOTEX TB 3000. ALL JOINTS TO BE SEALED WITH CELOTEX VAPOUR BARRIER TAPPED BEFORE BEING PLASTERED OVER. WALLS TO BE FINISHED WITH 12.5MM GYPROC PLASTERBOARD, ALL GAPS TO BE TAPED AND FILLED READY FOR DECORATION.

FRAME SECURED TO BRICK SKIN USING STAINLESS STEEL CHEVRON WALL TIES AT 600MM CENTRES HORIZONTALLY & 375MM CENTRES VERTICALLY. EXTRA WALL TIES TO BE INCORPORATED AT 225MM CRS AROUND ALL OPENINGS. PERPEND VENTS TO BE FITTED AT 1.2M CRS AT TOP AND BOTTOM OF TIMBER FRAME AND BELOW ALL CILLS. DPC TO BE FITTED AT A MINIMUM OF 150MM ABOVE ADJACENT GROUND LEVEL TO THE SAME LEVEL AS THE INNER LEAF DPC

FACE OF EXISTING EXTERNAL WALL– U' VALUE = 0. 21W/M2K (TO BECOME INTERNAL)
EXISTING GARAGE WALLS ARE TIMBER FRAME CONSTRUCTION CONSISTING OF ON 100 X 47 TREATED STUDS AT 600MM CRS. FINISHED WITH PLASTERBOARD INTERNALLY. EXISTING PLASTERBOARD TO BE REMOVED AND PACKED WITH 80MM CELOTEX FR 5000 20MM GAP FINISHED WITH 25MM CELOTEX TB 3000. ALL JOINTS TO BE SEALED WITH CELOTEX VAPOUR BARRIER TAPPED BEFORE BEING PLASTERED OVER. WALLS TO BE FINISHED WITH 12.5MM GYPROC PLASTERBOARD, ALL GAPS TO BE TAPED AND FILLED READY FOR DECORATION.

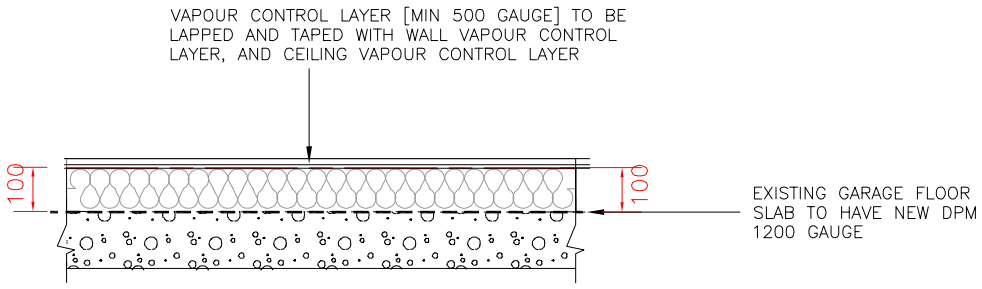

INSULATION TO FLOOR SLAB TO 100MM CELOTEX FR 5000 ON 1200 GAUGE DPM ABOVE THE GARAGE FLOOR SLAB COVERED WITH 500G VAPOUR BARRIER TO THE WARM SIDE AND FINISHED WITH 22MM T&G MOISTURE RESISTANT CHIPBOARD. NEW FLOOR LEVELS TO MATCH IN WITH EXISTING HOUSE FINISHED FLOOR LEVEL.

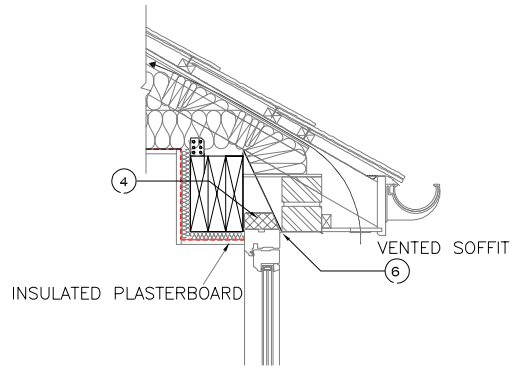

WINDOW LINTEL DETAIL

FOUNDATIONS TO BE 600MM X 200MM C35 REINFORCED CONCRETE STRIP FOUNDATIONS WITH A252 MESH WITH A MINIMUM 50MM COVER AND 400MM LAPS SECURELY TIED. TOP OF FOUNDATIONS TO BE 450MM MINIMUM FROM THE FINISHED GROUND LEVEL OR THE SAME LEVEL OF THE EXISTING HOUSE FOUNDATION, WHICHEVER IS GREATER.

TO MINIMISE THE RISK OF DIFFERENTIAL SETTLEMENT OCCURRING BETWEEN THE EXTENSION AND THE EXISTING STRUCTURE A 12MM THICK HYDROCELL FILLER BOARD/MOVEMENT JOINTS SHOULD BE PLACED BETWEEN THE EXISTING AND NEW FOUNDATIONS AND WALLS.
IF ANY SOFT SPOTS OR UNUSUAL GROUND CONDITIONS ARE ENCOUNTERED ON SITE, THE ADVICE OF A SUITABLY QUALIFIED PROFESSIONAL ENGINEER SHOULD SOUGHT IMMEDIATELY AND BUILDING CONTROL NOTIFIED.

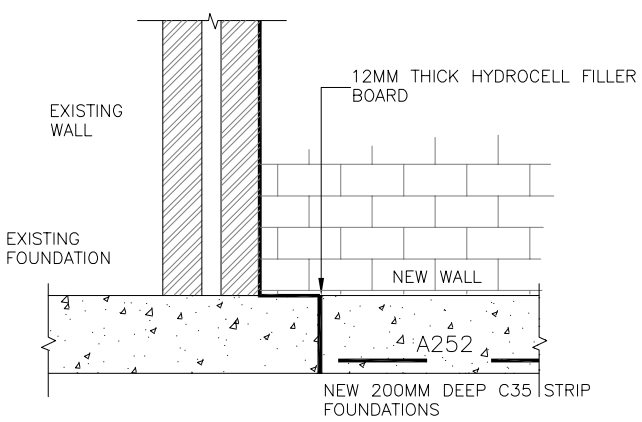

NEW TO EXISTING FOUNDATION
Scale 1:20

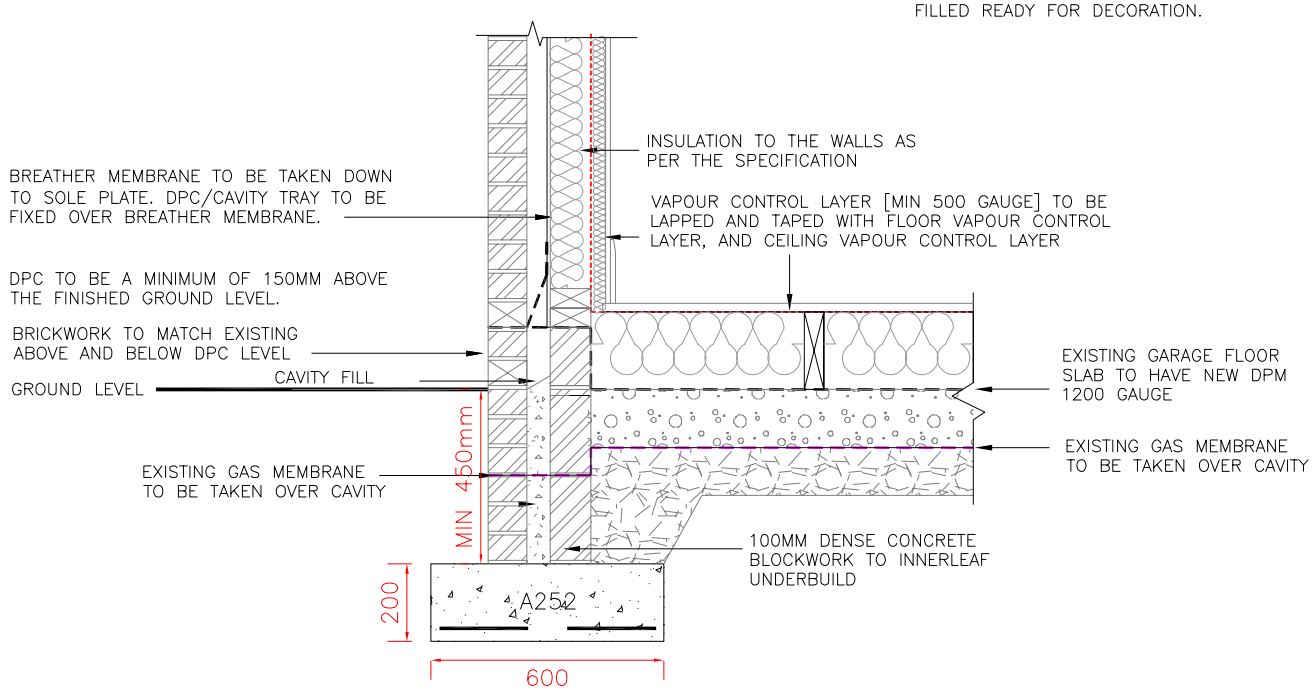

FOUNDATION, FLOOR SLAB AND WALL
Scale 1:20

wrona1978@gmail.com
07803 210022

ADDRESS:–	38 SHANKLY DRIVE, NEWMAINS, WISHAW, ML2 9QP		
PROJECT:–	CONVERSION OF GARAGE TO FORM A SITTING ROOM		
TITLE:–	STANDARD DETAILS		
DRW NO:–	BW 004	Rev:–	
SCALE:–	1/20	A3	