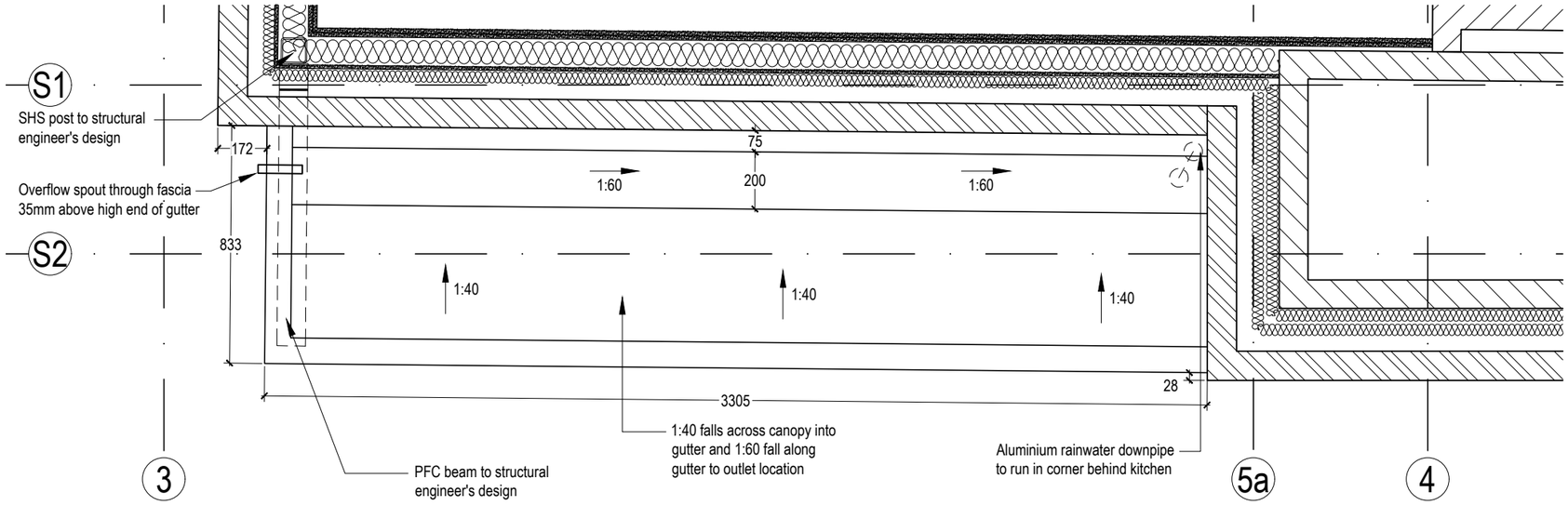

CANOPY ROOF PLAN

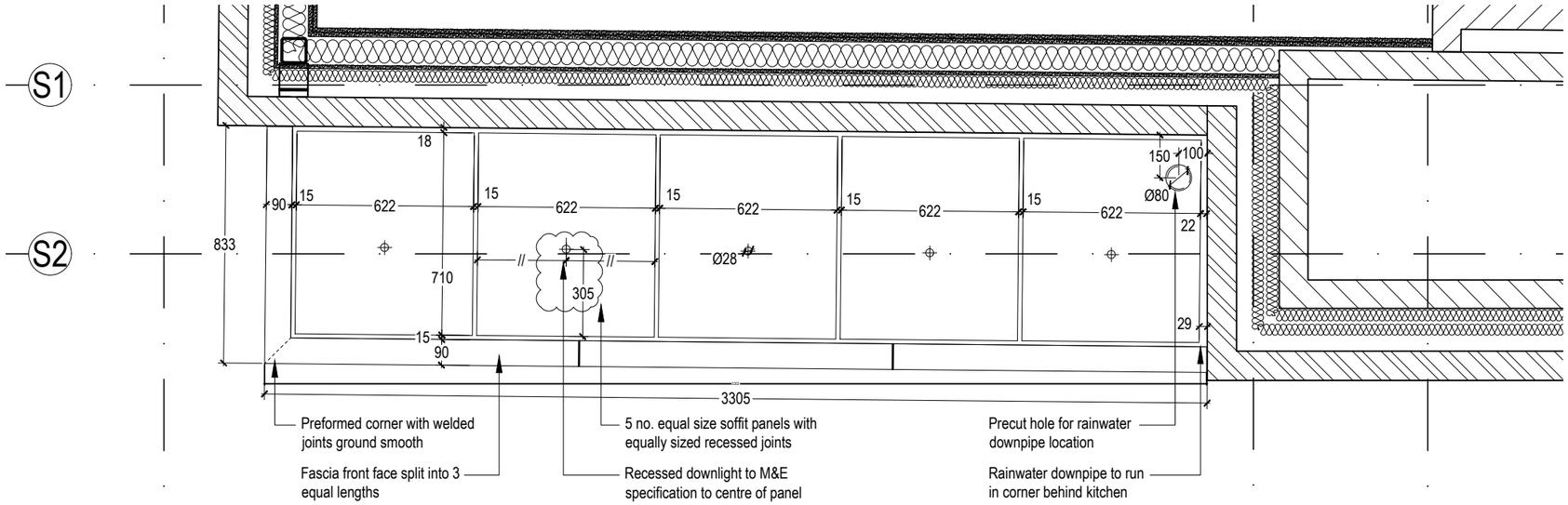

CANOPY SOFFIT PLAN

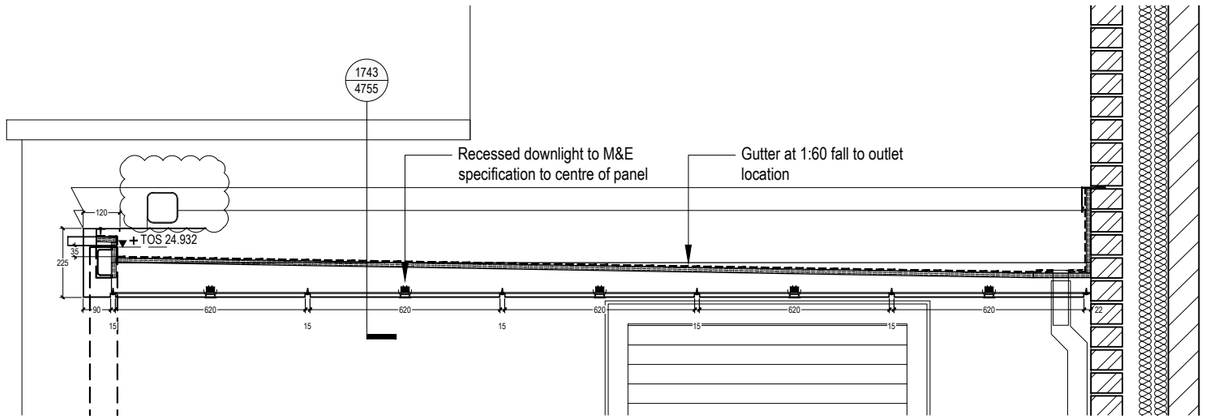

CANOPY LONG SECTION

Do not scale from this drawing, except for town planning purposes.
Work to figured dimensions only.
This drawing is the property of Brimelow McSweeney Architects and copyright is reserved by them.
This drawing is issued on condition that it is not copied, used or disclosed by or to any unauthorised person without the prior written consent of Brimelow McSweeney Architects.
The areas on the drawing have been measured directly from a CAD drawing and have no tolerances added or subtracted.
The areas have been calculated in accordance with the Code of Measuring Practice, 6th Edition (2007) using the stated options NIA, GIA, GEA. They are approximate and relate to the likely areas of the building at the current state of the design. Any decisions to be made on the basis of these predictions, whether as to project viability, pre-letting, lease agreements and the like, should make allowance for the following:
- Design development
- Accurate site survey, site levels and dimensions need to be fully evaluated
- Allowance for construction methods and building tolerances.
- Local authority consents

rev	date	drwn by	chkd	description
/	26.10.21	NPA	SMD	Preliminary Issue
A	09.10.21	ES	SMD	Issued for detailed design of metal canopy
B	03.12.21	NPA	SMD	Issued for construction. Hopper omitted. Downlight setting out updated.

NB. The canopy cladding is instructed for detailed design only, fabrication and installation is subject to a further instruction.

status
FOR CONSTRUCTION

BRIMELOW McSWEENEY ARCHITECTS
26 Great Queen Street, Covent Garden, London WC2B 5BL
tel: 020 7831 7835 - email: admin@bm-architects.co.uk

project
45-51 Whitehall
London SW1A 2BA

title
Roof terrace entrance canopy
Plans and section

scale	date	drawn
1:20@A3	18-10-21	NPA

drawing no.	revision
1743-4754	B