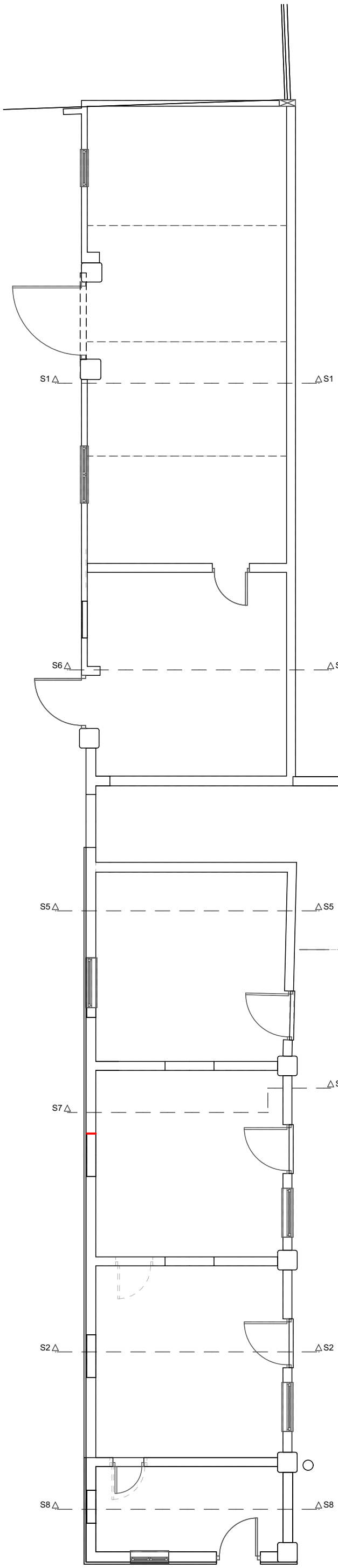

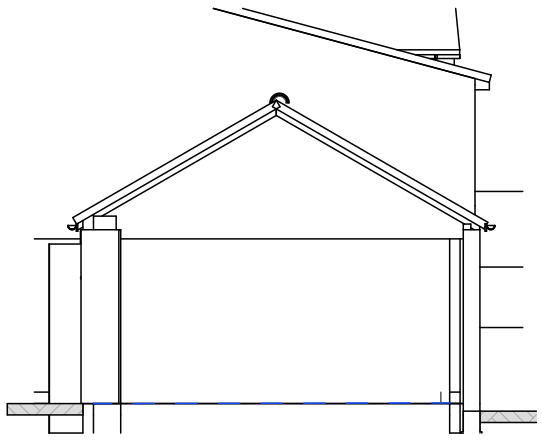

Section S1 1:100

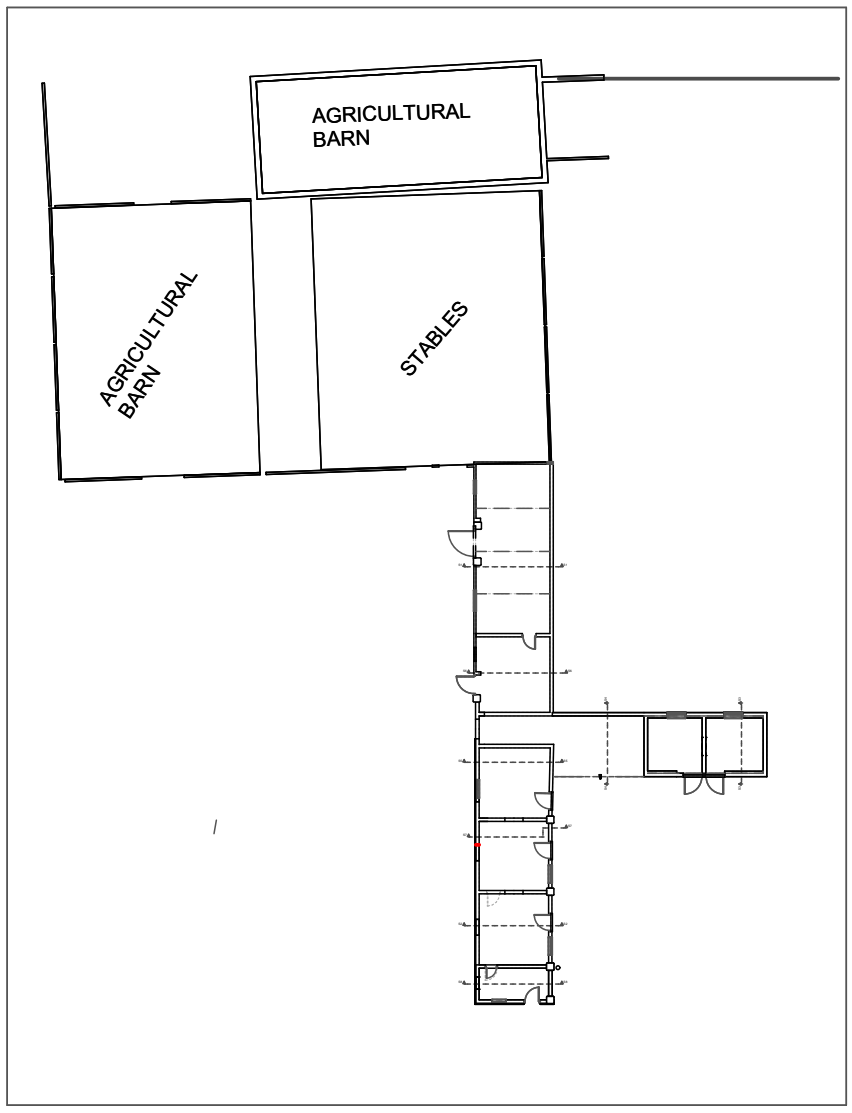

GROUND FLOOR 1:500

1:500 0 10m 20 30

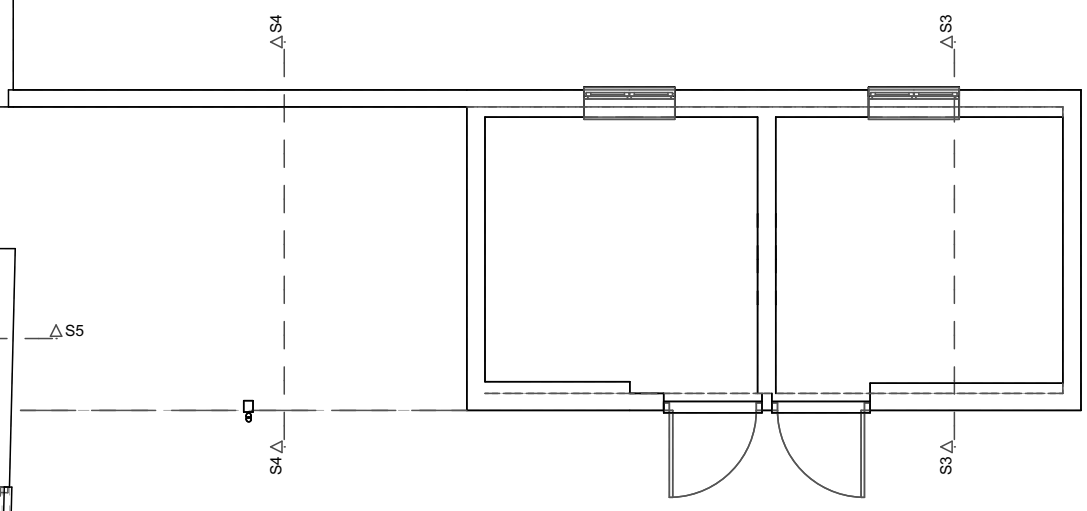

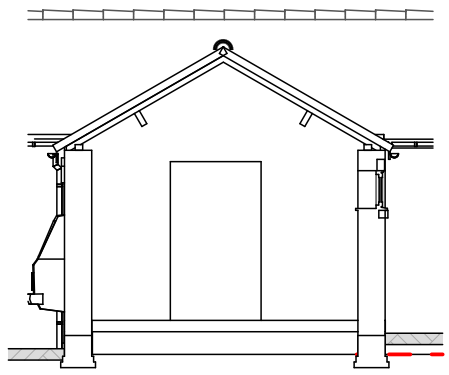

Section S3 1:100

1:100 0 1m 2 3 4 5 6

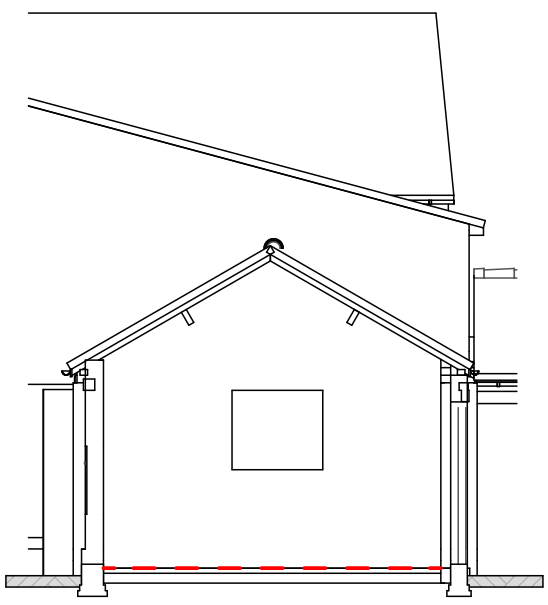

Section S2 1:100

GROUND FLOOR 1:100

NEIL HARRISON
Planning & Construction Drawings Ltd.

TEL: 01977 662413 MOB: 07825 480748
EMAIL: nhdrawing@gmail.com WEB: nhdrawing.co.uk

CLIENT:
Mr & Mrs. D. Tesseyman.

PROPOJECT:
Gunby Hall Former Stables, Breighton Road, Gunby, Selby. YO8 6DQ

DRAWING:
Reconstruction of Stable Block Conversion
PLAN PRE 2021

DATE: Dec-21
SCALE: As shown @ A3

DWG NO & REV: 0012 - 10

AMENDMENTS: