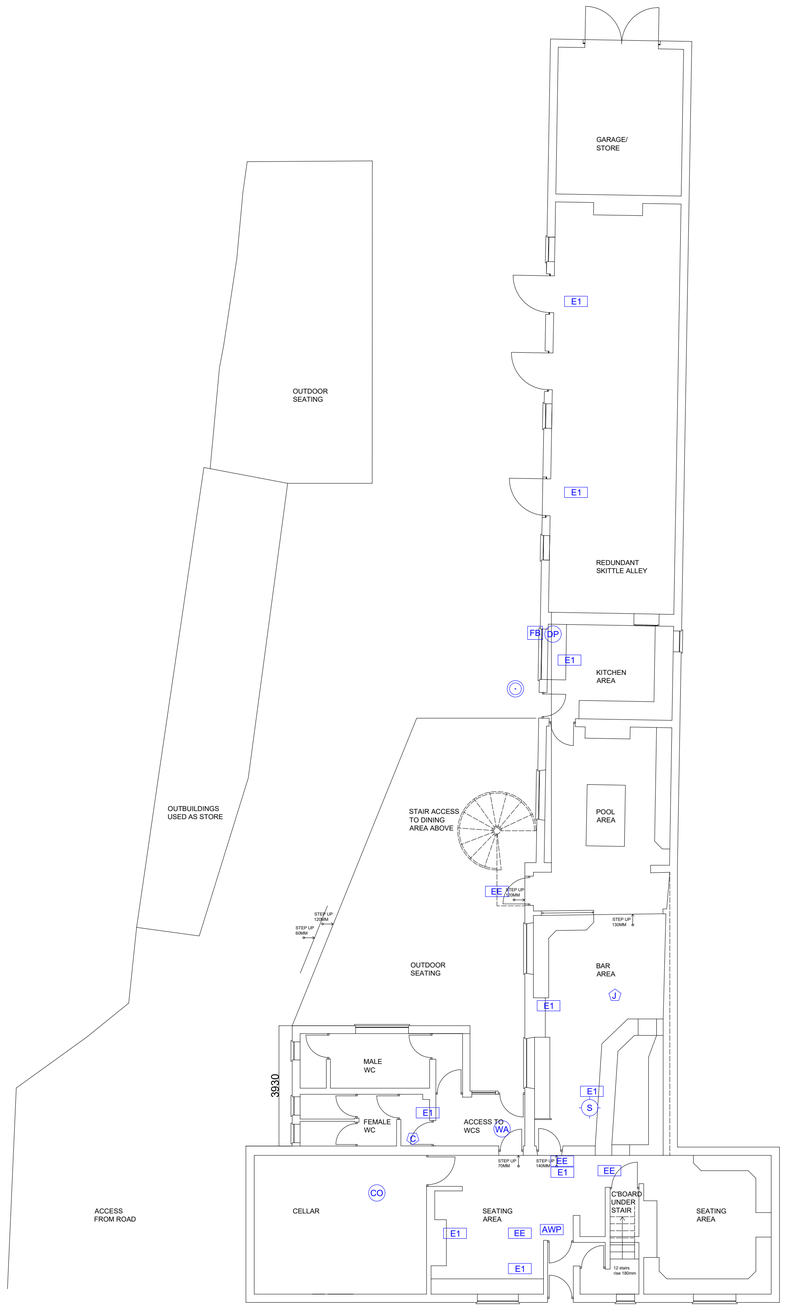

GROUND FLOOR PLAN @1:100

1:100

2m 0 2m 4m 6m 8m 10m

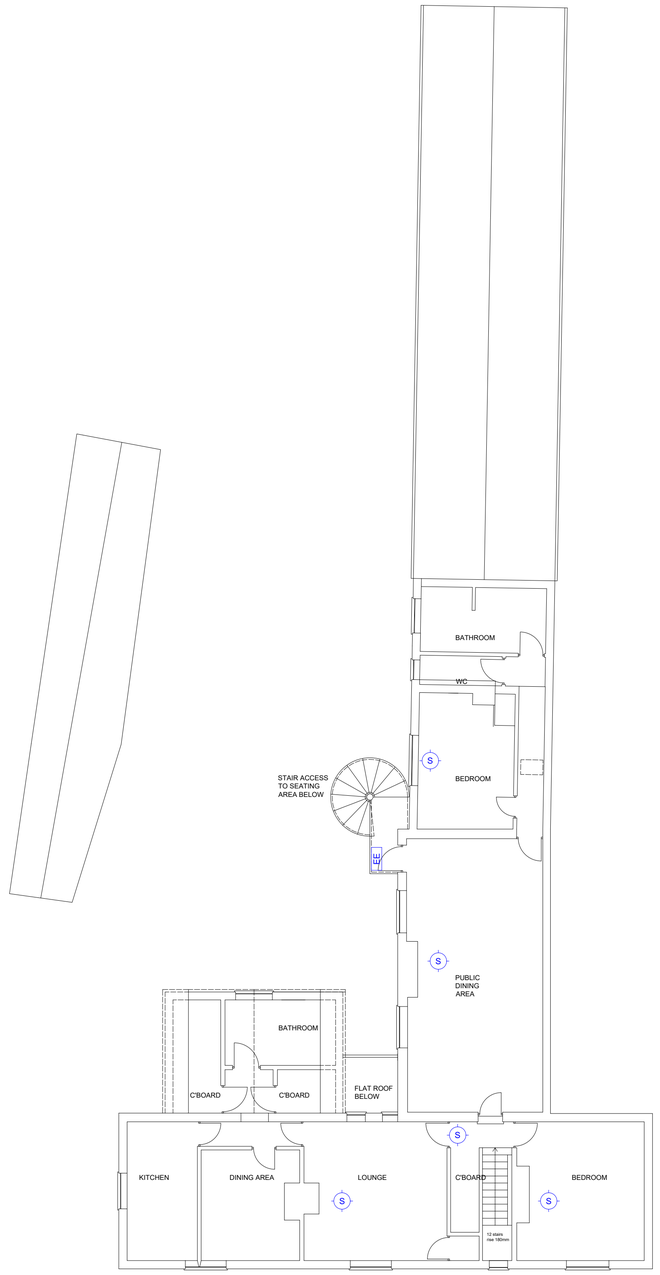

FIRST FLOOR PLAN @1:100

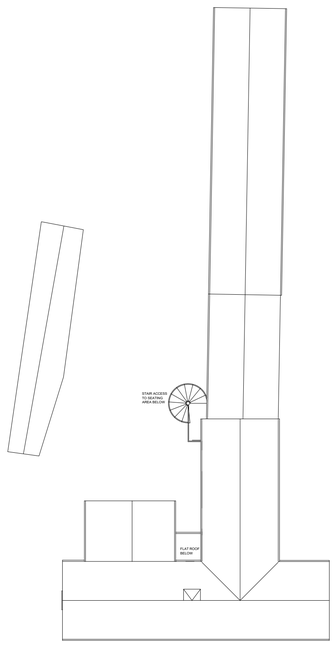

ROOF PLAN @1:200

1:200

4m 0 4m 8m 12m 16m 20m

KEY

N1	General Fire Notice
N2	Staff Fire Notice
N3	'Fire Door Keep Locked' sign
N4	'Fire Exit Keep Clear' sign
N5	'Fire Door Keep Locked' sign
FB	Fire Blanket
DP	Dry Powder Fire Extinguisher
CO	Carbon Dioxide Fire Extinguisher
FO	Foam Fire Extinguisher
WA	Water Fire Extinguisher
E1	Emergency Light Fitting
EE	Emergency Exit Sign
H	Heat Detector
S	Smoke Detector
	Break Glass Call Point
	Fire Alarm Sounder
FAP	Fire Alarm Panel
AWP	Amusement with Prizes
SWP	Skill with Prizes
ATM	Cash machines
PP	Pay Phone
J	Juke Box
C	Cigarette M/c

MARSTON'S

WHEATSHEAF INN

11 NOTTINGHAM ROAD
NOTTINGHAM
NG12 3BP

PHC: 16229

Drawing No: 11.21/16229/FP.RP

FLOOR/ROOF PLAN

Scale: AS STATED @ A1 Drawn By: AF

MARSTON'S PUBS AND BARS, SURVEYORS
DEPARTMENT, MARSTON'S HOUSE, BREWERY
ROAD, WOLVERHAMPTON, WV1 4JT
Tel: 01902 711811

* Contractors responsibility to check all site dimensions & levels prior to commencing works.
* Contractor to comply in all respects with current building regulations & guidelines whether specified on this drawing or not.
* The drawing must be read & checked against any other specialist drawings privided by the company or by consultants.
* This drawing and the works depicted are the copyright of the company & may not be replicated without written permission.