Arboricultural Report

Conversion of house into five flats
17 Victoria Grove
Stockport
SK4 5BU

Commissioned by:	Surveyed and reported on by:	Report Date:
Andy Green Avro Homes	David Bailey *BSc(hons),M.Arbor.A,cert.Arb*(RFS)	22 June 2022

50 Chestnut Road, Loggerheads, Market Drayton, Shropshire TF9 4BL
Tel: 01630 673216 Mob: 07813 808174
Web: www.oldoaktreecare.co.uk email: oldoaktree@talktalk.net

Arboricultural ASSOCIATION Professional Member

Contents

1.0 Summary

1.1 The proposal is to convert a large mature town house into five new flats, access, parking and garden space.

1.2 There are six category B trees on or next to the site. Additionally, there is one category C hedge.

1.3 No tree is to be removed. A small amount of excavation will be made in two trees RPAs and additional coverage of one trees RPA will be required to form parking. To mitigate this, large areas covered by macadam and concrete will be removed and replaced by a permeable three-dimensional cellular confinement system and a woodchip mulch used on open soil at the front of the property to aid tree vitality.

1.4 The trees affected are limes which are a species that cope well with root disturbance. I do not expect the trees to be significantly harmed by the proposal.

1.5 Fencing will ensure retained trees can be suitably protected during the build.

2.0 Instructions

2.1 I am instructed by Andy Green of Avro Homes to undertake a tree survey at 17 Victoria Grove and record all significant trees that may be affected by the proposed development.

2.2 The proposal is to convert the existing building into five separate flats along with access and parking.

2.3 There are several trees on or adjacent to the site, some of high quality. Consideration is to be made to justify any trees removed or work to them and ensure retained trees are not significantly damaged by the proposal.

2.4 I am to produce a tree report to support the planning application. The report is to be compliant with BS5837:2012[1] hereafter referred to as BS5837.

3.0 Preliminary matters

3.1 The survey and report cover only arboricultural matters relating to trees that may be affected by the development. It deals with identifying the benefits and constraints trees will impose upon the development site, which trees will need to be removed and how the remaining specimens can be protected and how retained trees will affect the site.

3.2 Statutory protection of trees, either tree preservation orders, conservation area status or historical planning conditions have not been thoroughly investigated. However, a check of the Councils Planning map with indicated TPOs indicates no TPOs applied to any of the trees surveyed[2].

3.3 Plans supplied to myself:

i) Site topographical survey proposal supplied by architect Reece Vigelskas.

Plans I have produced to accompany this report

i) Tree Constraints Plan PC22/540/TCP
ii) Tree Protection Plan PC22/540/TPP

3.4 Where buildings are constructed close to trees, reference should be made to the NHBC Standards 2022[3]. This document, updated yearly, gives appropriate foundation depths for buildings close to trees. It is recommended that the soil's modified plasticity index is investigated to consider the likelihood of soil movement with moisture change. This will allow the appropriate foundation depth to be calculated.

3.5 The data, views and opinions of this report relate to the survey undertaken on the date shown and does not take into account the effects of extreme weather

[1] BS5837:2012 Trees in relation to design, demolition and construction: Recommendations – British Standards Institute
[2] https://www.stockport.gov.uk/tree-preservation/check-if-there-is-an-existing-tree-preservation-order# Accessed 22 June 2022. Note caveats on use of the map. For definitive answers the Council should be consulted.
[3] National House Builders Council Standards 2022 Part 4, Chapter 2 Building near trees. www.nhbc.co.uk

conditions, vandalism or accidental damage. Neither can the effects of poorly executed tree surgery work, not complying to current good practice, be predicted. Old Oak Tree Care cannot accept liability in connection with these factors. This report requires renewal in two years from the date of survey, or as soon as site conditions, tree health or tree structural conditions significantly alter.

4.0 Method of survey

4.1 The survey was undertaken on 9 June 2022.

4.2 Trees were surveyed to measure height, trunk diameter, crown spread and height, health, structural condition, estimated remaining life expectancy and overall quality. This and other information was gathered to comply with section 4.4.2 of BS5837. Trees were categorised utilising the same standard, see Appendix C.

4.3 Stem diameters were measured using a surveyor's tape. Crown spreads and heights were measured using a laser rangefinder. Heights were estimated using the height function of the laser rangefinder.

4.4 All measurements and observations were made from the ground and no soil or tissue samples were taken. Although significant visually apparent hazards within trees will be identified and commented upon, the survey is not a dedicated health and safety survey of the identified trees.

4.5 Where trees could not be reached when off site or inaccessible, dimensions were estimated.

5.0 Site details

5.1 The site is a mature semi-detached residential property in a well-established street of similar dwellings.

5.2 To the north is Victoria Grove with similar houses and gardens beyond it. In all other directions are similar properties and gardens.

5.3 The level of the land falls slightly from north to south.

5.4 There are large trees on the boundary of the site. The area is characterised by its mature urban and verdant nature.

5.5 Viewing the Cranfield soil map[4], it appears that the soil is freely draining and slightly acid. Soil of this kind provides a good medium for tree growth. The modified plasticity index of the soil is not known.

6.0 Summary of trees

6.1 All data gathered on trees is supplied in appendix E. Table 1 and 2 below give a summary of the information.

Category	Description of category	Number
A	High quality with an estimated remaining life span of at least 40 years. Particularly good examples of their species, especially if rare or unusual. They will be visually important and may have significant conservation or historical values.	0
B	Moderate quality and expected to remain between 20 to 40 years. Might have been included as a category A, but downgraded by impaired conditions. Possibly lacking special qualities to be regarded as Category A. Group which collectively increase its value from C to B or a particularly effective screen.	5
C	Low quality with an expected lifespan of 10 to 20 years or below 150mm in diameter. Unremarkable trees, either young, impaired or poor species. Unlikely to increase in quality as time goes by. No conservation or cultural value.	0
U	Those in such a condition that they cannot be realistically retained as living trees for longer than 10 years. Serious structural or physiological problems. Also dead trees.	0
Group	Trees of similar species, size or character which are grouped together. The number of the group is given together with the categorisation.	0
Hedge	Groups of trees planted in lines as a hedge. Trees originally planted as a hedge but have not been managed in some time, reverting back to a line of trees. The number of the hedge is given together with its categorisation.	1-C

Table 1: Number of categorised trees, groups and hedges. A brief description of categorisation together with colour coding. Appendix E gives full detail.

6.2 A brief description of pertinent data relating to all trees is given in table 2. A key to the table is found below it.

[4] Cranfield Soil and Agrifood Institute Soilscapes. www.landis.org.uk/soilscapes/

No.	Species	Height	Stem Dia.	Cat.	Comment
Li1	Lime	21	625	B	pollarded some time ago
Li2	Lime	21	625	B	pollarded some time ago
Be3	Beech	20	400	B	in next door's front garden
H4	Hedge	2	50	C	slightly overgrown privet hedge
Li5	Lime	20	750	B	pollarded some time ago, in next doors garden
Sy6	Sycamore	20	700	B	in next door's rear garden

Table 2: Summary of trees (Key below)

No: Tree identifier using letters to indicate species and a sequential number.
G indicates a group, H indicates a hedge.
Species: Tree species using the common name.
Height: Height in metres.
Stem Dia: Stem diameter measured at 1.5 metres from the ground in millimetres.
Cat: Category in relation to BS5837. See Appendix C for details on categorisation.
Note: Numbers for sub-categorisation are not used.
Comments: Comments, if necessary. 0 if none.

7.0 Arboricultural impact assessment

7.1 It is quite clear that the large mature trees are a very important part of the landscape which significantly adds to the character and appearance of the area. Therefore, removal or significant damage to any of these trees, although not protected by a tree preservation order is to be avoided. The trees will significantly add to the character of the new development increasing the value of the properties.

7.2 A small amount of crown raising work will be required on Li5 which overhangs the property from next door. The crown should be raised from 1 metre to 4m above ground level to provide clearance for vehicles when in the property.

7.3 The hedge H4 has been surrounded by foliage killing off most foliage at the lower portion of this hedge. To allow this hedgerow to regenerate in an acceptable form, it should be coppiced back as early as possible to a height of approximately 30cm. this will allow it to develop into a useful hedge which will be filling out and providing cover as the flats are being put onto the market.

7.4 Li1 is unlikely to be affected by the proposed redevelopment. A bin store is to be siyed upon its RPA which will be placed upon a three-dimensional cellular confinement system (TDCCS), but this is unlikely to have a negative impact upon the tree. Hardstanding comprising of the drive will be removed down to ground level and then replaced by a TDCCS along with a permeable surface. The removal of impermeable surfaces will be of a positive benefit to the tree.

7.5 The lime tree Li2 on the other side of the drive will have a number of actions taking place within its RPA or close to it. Extensions to the front of the building will be close to the RPA. This will take place on ground which is currently covered in macadam and therefore unlikely to be an important rooting area for this tree. Two new parking spaces will be provided at the front of the property. This will be placed on the RPA of Li2 and will be constructed using a no-dig construction technique along with a TDCCS which will avoid significant disturbance of the rooting area below. The final surface will be permeable to allow air and water transfer to the soil below it. In addition to this, the drive entrance will be made wider to better suit modern vehicles. 500mm of excavation will need to be made into the wall on the west of the drive. The majority of this excavation will be the stones retaining the soil behind it, but some excavation into soil within the RPA, approximately 300mm, is required.

7.6 The covering and excavation into the RPA of Li2 will be minor but it will be important to provide mitigation for such actions. The remaining soil at the front of the property near to the lime will be covered in a woodchip mulch which will be a permanent low maintenance feature of the site providing high quality rooting potential for the tree in this area. It is unlikely that this tree will be significantly harmed by the small harm to its RPA when considered against the benefits provided to it.

7.7 Li5 is another large lime in a next doors garden. Its RPA will stretch into the rear garden of No 17 but given the presence of the now demolished garage, hardstanding and macadamed area, its roots will have not been able to gain useful rooting potential in this area, being much more likely to have found such within the grassed area of the rear of No 17 and No 19 beside it. I have attempted to show a likely distribution of the RPA given these ground constraints and it appears that a small amount of the RPA will be compromised by the proposed excavations. The area of excavation will be small and a good way from the tree. To mitigate against this, a permanent woodchip mulch will be laid as shown in appendix B to mirror the loss of rooting area available to the tree. It is not expected that the tree will significantly suffer from this alongside the additional mitigation offered in 7.8.

7.8 Although the proposed drive along the edge of the property will travel over currently covered macadam or over the now demolished garage, the use of a TDCCS along its entire route along with filling open areas under the garage with structured soil whilst compromising the now defunct foundations will provide useful rooting area for Li5 significantly increasing the rooting potential for the tree. Given the final surface of this drive will be permeable to both water and air, root development in these areas will help to maintain the lime. It is not expected that nay significant harm will come to the lime tree.

7.9 It should be noted that lime are a tree which cope well with root and crown disturbance within the urban environment. Given all the trees are healthy and

vigorous, the building work around them is unlikely to cause significant harm to these trees.

7.10 All trees on site will benefit from the removal of the current macadam surfaces, hardcore, garage foundations and sub base and concrete surfaces within their RPA. Replacing this with a TDCCS along with a permeable surface will allow air and moisture to reach the soil below creating a better rooting environment for the nearby limes. The TDCCS will prevent significant damage to the sub soil. The geomemberane above and below the TDCCS will provide effective barriers between the soil and oil or pollutants which may seep below the surface.

7.11 While there are a few small harms to trees health by digging within RPAs and covering soil with a TDCCS, these harms are mitigated by covering the majority of previously paved and covered areas with a permeable TDCCS and providing added woodchipped areas to bare soil to add vitality to trees at the front of the property. Carried out correctly, the trees are unlikely to suffer from what is proposed.

8.0 Tree protection

8.1 Appendix A and B show the category of trees, their crown spread and their root protection area (RPA), an area of rooting around the tree which if retained will provide suitable medium for the tree to continue to grow without significant harm.

8.2 RPAs do not show the entire rooting area of the tree. They may show just ½ or $^{1}/_{3}$ of it depending upon site conditions. The RPA is usually drawn as a circle 12 times the diameter of the tree at 1.5m from the ground or its mathematical equivalent given in BS5837. However, site conditions may require the RPA to be drawn differently depending upon the most likely area where good rooting is found for the trees. In this case I have tried to show the likely distribution of RPAs favouring uncovered areas followed by covered areas in proximity to the trees.

8.3 Protected RPAs are to be kept clear of refuse, materials, fuels and chemicals. These items are to be prevented from leaking into RPAs, either above or below ground.

8.4 Protective fencing should be in place before any plant, materials, deliveries, site offices or skips arrive. No demolition or construction work is to take place until protective fencing is installed and approved for use.

8.5 Protective fencing similar to that shown in BS5837, shown in Appendix D, is to be used to protect RPAs from vehicular and foot access. The fencing is to be securely joined and attached to immovable objects to prevent it from being moved. Fencing should be firmly attached into the ground and will require tools to move it. The positioning of fencing is shown in appendix B.

8.6 Any boundary fencing passing through RPAs should have post holes dug by hand avoiding severance of tree roots over 25mm in diameter. Should gravel boards be used, they are not to be dug into the ground.

8.7 Underground services are not to enter RPAs. Should a service run be required within an RPA then a site-specific method statement is to be produced to show how this will not cause damage to trees.

8.8 The correct materials and method of work for the use of three-dimensional cellular confinement systems (TDCCS) is essential to ensure trees are not harmed by the development. These TDCCSs will need to be put in place before building work takes place to ensure soil below is not compacted by works around them. Appendix F is a checklist and method statement for the use of CellWeb, a well known TDCCS and it should be carefully followed.

8.9 It is accepted that a number of operations such as removing macadam and sub-surfaces within RPAs and excavations within RPAs will require a site-specific arboricultural method statement to show the LPA and contractors how these operations will occur without causing further damage to trees. The developer is happy to provide a conditioned arboricultural method statement showing all of these processes within the planning permission.

9.0 Conclusion

9.1 The proposal is to convert a large mature town house into five new flats, access, parking and garden space.

9.2 There are six category B trees on or next to the site. Additionally, there is one category C hedge.

9.3 No tree is to be removed. A small amount of excavation will be made in two trees RPAs and additional coverage of one trees RPA will be required to form parking. To mitigate this, large areas covered by macadam and concrete will be removed and replaced by a permeable three-dimensional cellular confinement system and a woodchip mulch used on open soil at the front of the property to aid tree vitality.

9.4 The trees affected are limes which are a species that cope well with root disturbance. I do not expect the trees to be significantly harmed by the proposal.

9.5 Fencing will ensure retained trees can be suitably protected during the build.

Appendix A

17 Victoria Grove, Stockport,
Cheshire SK4 5BU

Tree Constraints Plan
Showing all trees, crown dimensions, tree categories and root protection areas (RPAs)

SCALE :	DATE :	
1 : 200 @ A3	28/06/2022	N

David Bailey Old Oak Tree Care 01630 673216
07813 808174 oldoaktree@talktalk.net

Map reference:
PC22/540/TCP

Legend

Crown Spread

Root Protection Area

Category 'A' Category 'B' Category 'C' Category 'U'

0 15m

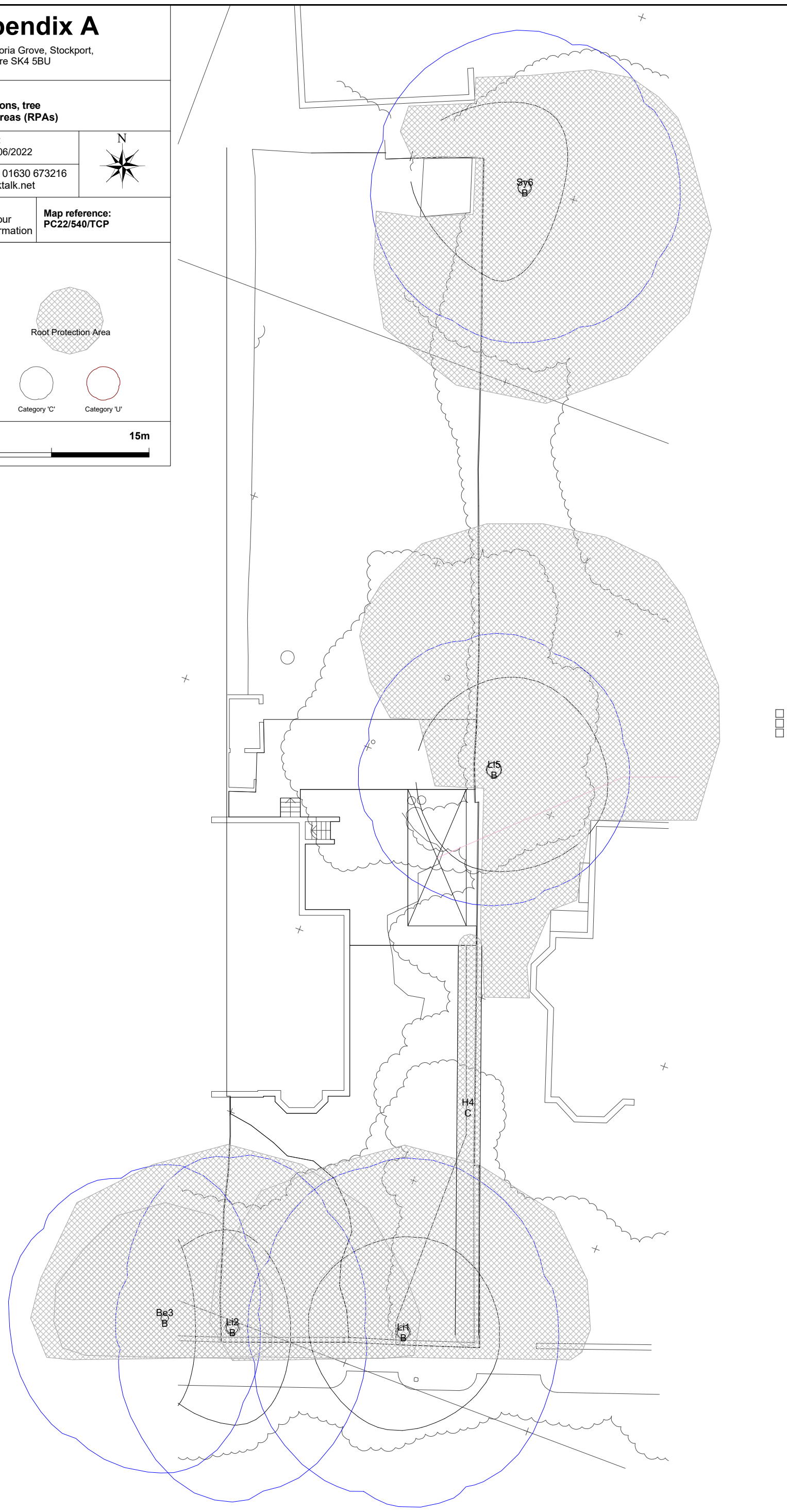

Appendix B

17 Victoria Grove, Stockport,
Cheshire SK4 5BU

Tree Protection Plan
Showing all retained trees, crown dimensions, tree categories, RPAs, protective fencing and special engineering

SCALE :	DATE :	N
1 : 200 @ A3	28/06/2022	

David Bailey Old Oak Tree Care 01630 673216
07813 808174 oldoaktree@talktalk.net

Map reference:
PC22/540/TPP

Legend

Protective fencing | TDCCS | Woodchip

Crown Spread | Root Protection Area

Category 'A' | Category 'B' | Category 'C' | Category 'U'

0 — 15m

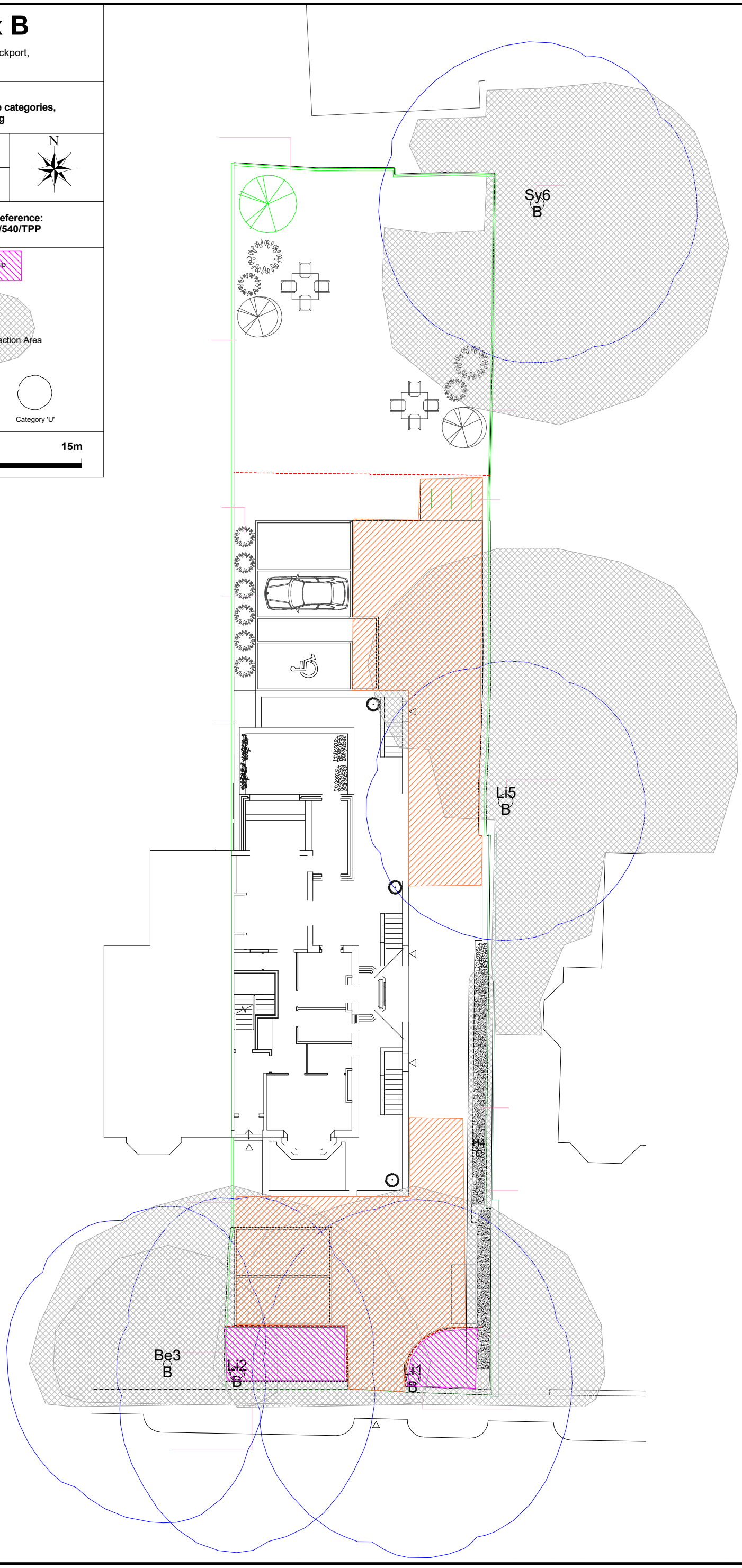

Table 1 **Cascade chart for tree quality assessment**

Category and definition	Criteria (including subcategories where appropriate)			Identification on plan
Trees unsuitable for retention (see Note)				
Category U Those in such a condition that they cannot realistically be retained as living trees in the context of the current land use for longer than 10 years	• Trees that have a serious, irremediable, structural defect, such that their early loss is expected due to collapse, including those that will become unviable after removal of other category U trees (e.g. where, for whatever reason, the loss of companion shelter cannot be mitigated by pruning) • Trees that are dead or are showing signs of significant, immediate, and irreversible overall decline • Trees infected with pathogens of significance to the health and/or safety of other trees nearby, or very low quality trees suppressing adjacent trees of better quality *NOTE Category U trees can have existing or potential conservation value which it might be desirable to preserve; see **4.5.7**.*			See Table 2
	1 Mainly arboricultural qualities	**2 Mainly landscape qualities**	**3 Mainly cultural values, including conservation**	
Trees to be considered for retention				
Category A **Trees of high quality** with an estimated remaining life expectancy of at least 40 years	Trees that are particularly good examples of their species, especially if rare or unusual; or those that are essential components of groups or formal or semi-formal arboricultural features (e.g. the dominant and/or principal trees within an avenue)	Trees, groups or woodlands of particular visual importance as arboricultural and/or landscape features	Trees, groups or woodlands of significant conservation, historical, commemorative or other value (e.g. veteran trees or wood-pasture)	See Table 2
Category B **Trees of moderate quality** with an estimated remaining life expectancy of at least 20 years	Trees that might be included in category A, but are downgraded because of impaired condition (e.g. presence of significant though remediable defects, including unsympathetic past management and storm damage), such that they are unlikely to be suitable for retention for beyond 40 years; or trees lacking the special quality necessary to merit the category A designation	Trees present in numbers, usually growing as groups or woodlands, such that they attract a higher collective rating than they might as individuals; or trees occurring as collectives but situated so as to make little visual contribution to the wider locality	Trees with material conservation or other cultural value	See Table 2
Category C **Trees of low quality** with an estimated remaining life expectancy of at least 10 years, or young trees with a stem diameter below 150 mm	Unremarkable trees of very limited merit or such impaired condition that they do not qualify in higher categories	Trees present in groups or woodlands, but without this conferring on them significantly greater collective landscape value; and/or trees offering low or only temporary/transient landscape benefits	Trees with no material conservation or other cultural value	See Table 2

Appendix D

Figure 2 of BS5837:2012

Figure 2 **Default specification for protective barrier**

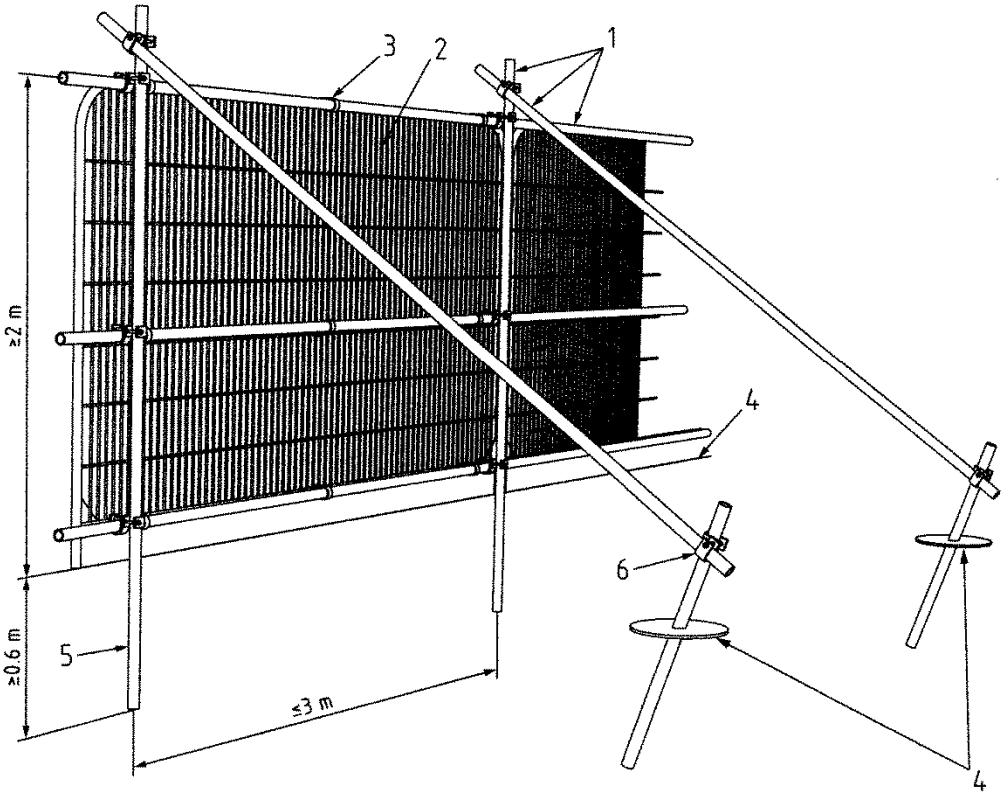

Key

1 Standard scaffold poles

2 Heavy gauge 2 m tall galvanized tube and welded mesh infill panels

3 Panels secured to uprights and cross-members with wire ties

4 Ground level

5 Uprights driven into the ground until secure (minimum depth 0.6 m)

6 Standard scaffold clamps

Appendix D (continued)

Figure 3 of BS5837:2012

Figure 3 **Examples of above-ground stabilizing systems**

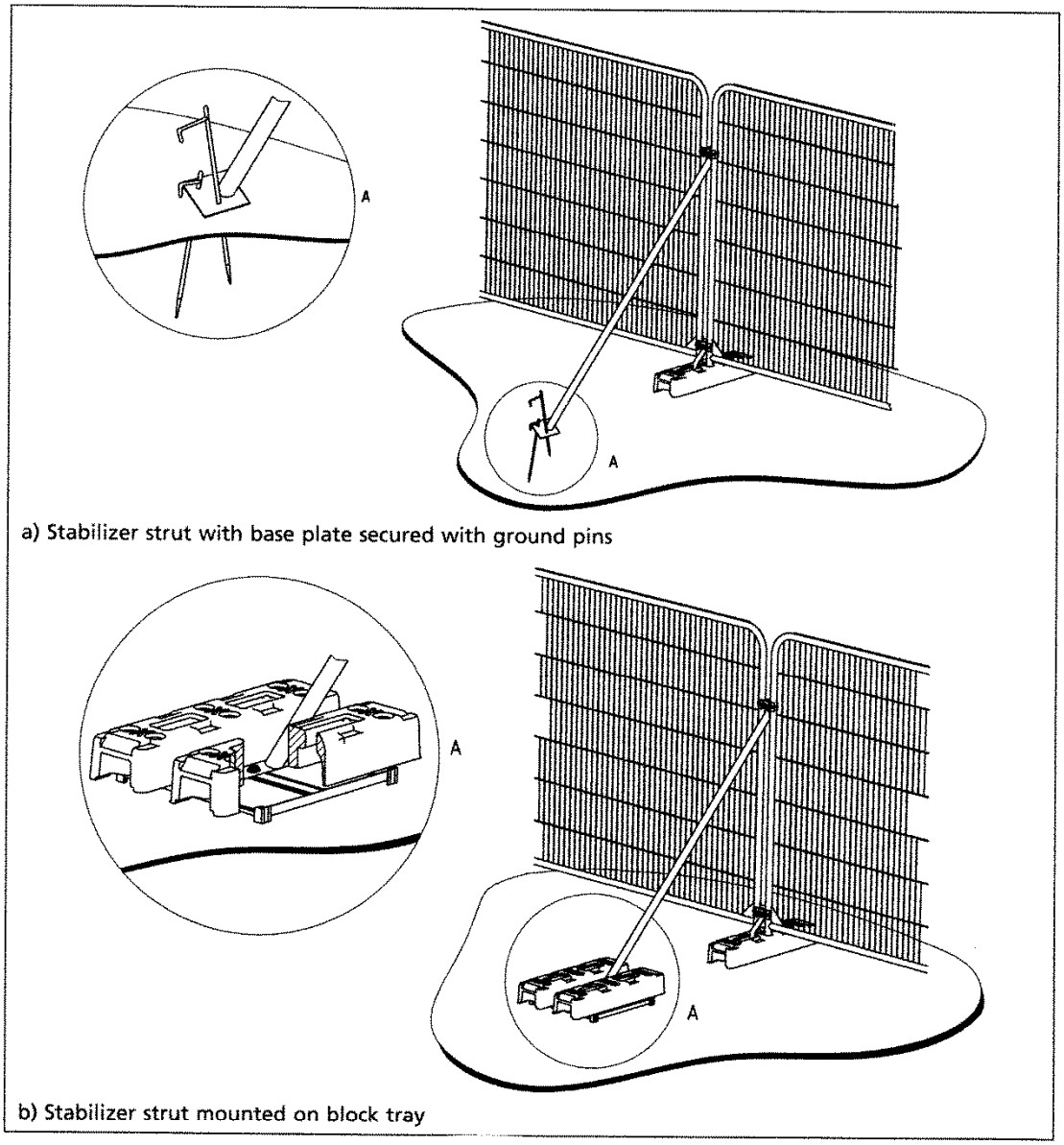

a) Stabilizer strut with base plate secured with ground pins

b) Stabilizer strut mounted on block tray

Appendix E Tree Schedule - Key

Where measurements are estimated due to lack of access or vegetation, a * denotes this.

Tree Number -	Identification for specific tree. Using a couple of letters to help with species identification together with a number. Groups or hedges will be identified as Gr.
Species-	Tree species, using common name.
Height-	Taken using angular triangulation function of a laser rangefinder.
Diameter-	Taken by measuring circumference with a tape measure and applying Pi equation or by measuring circumference by eye if entire circumference is not accessible (in this case denoted by *).
Crown spread-	Radius of crown at four cardinal points, north, east, south and west measured by laser rangefinder. (Estimates denoted with a *).
Crown height-	Height of lowest branch at each cardinal point. Measured by laser rangefinder. (Estimates denoted with a *).
Age bracket-	Estimated life stage of tree ranging from young, mid-aged, early-mature, mature and over-mature.
Physiological condition-	Assessment of health and vitality of the tree. Good, fair, poor or dead. Fair or poor will have more details attached.
Structural condition-	Assessment of physical structure of tree. Good, fair, poor or dead. Fair or poor will have more details attached.
Years remaining-	Estimate of likely useful life of tree taking into account age, species, character, situation and likely management requirements.
Quality assessment-	Subjective assessment. Either A-very good, B-good, C-reasonable or U-unsuitable for retention. See appendix C for more details.
RPA radius-	Positioning of root protection area (RPA) measured from centre of the tree to the radius. This is for circular RPAs. Where RPAs have been adjusted for site conditions and are no longer circular this value will not be correct.
RPA area-	Area of RPA irrespective of its shape.
Notes:	Any notable comments on group make up, physiological, structural condition or notable features.

Appendix E

Tree Schedule

Tree number	Species	Height (m)	Diameter (mm)	N Crown spread (m)	E	S	W	N Crown Height (m)	E	S	W	Age bracket	Physiological Condition	Structural Condition	Years remaining	Quality assessment	RPA radius(m)	RPA Area (m2)	Notes
Li1	Lime	21	625	9	8	9	8	6	6	6	6	mature	good	good	20 to 40	B	7.5	177	0
Li2	Lime	21	625	9	7	9	6	3	10	8	3	mature	good	good	20 to 40	B	7.5	177	pollarded some time ago
Be3	Beech	20	400	8	8	8	5	6	6	6	10	mature	good	good	40 to 40	B	4.8	72	in next door's front garden
H4	Hedge	2	50	1	1	1	1	0	0	0	0	mature	good	good	10 to 20	C	0.6	1	slighly overgrown privet hedge
Li5	Lime	20	750	7	7	7	7	1	1	1	1	mature	good	good	20 to 40	B	9	254	pollarded some time ago, in next doors garden
Sy6	Sycamore	20	700	8	8	8	8	3	3	3	3	mature	good	good	20 to 40	B	8.4	222	in next door's rear garden

CellWeb TRP (Installation Checklist)

Installation of the CellWeb™ Cellular Confinement System within the Root Protection Area of Trees

The following installation checklist can be used on projects where CellWeb™ is being installed as a permanent hard surface, a sub-base, or as temporary root protection during construction works.

The installation procedure can be utilised by the Local Authority (LA) tree officer to ensure that CellWeb™, that is being used for tree root protection, will be effectively installed. Alternatively, it may be more appropriate to request that the installation is certified by arboricultural consultants who are experienced in the installation of CellWeb™ and who can offer installation certification as part of a package endorsed by Geosynthetics.

The completion of the CellWeb™ installation in accordance with this procedure will enable planning conditions to be successfully signed off on completion of the project.

Stage 1 Initial site meeting to assess tree protection requirements in line with the Arboricultural Method Statement (AMS) produced by the developer's arboricultural consultant.

- Check the ground conditions, including the presence of compaction or made ground.

  Is any remedial work required, such as the removal of old hard surfaces and rubble or soil decompaction?

- Compare the existing ground levels with the new levels proposed in the development.

  Do the new levels allow for the depth of hard surfaces installed with a CellWeb™ foundation without excavation?

  Will excavation be required to achieve the proposed levels or to enable site drainage or integration with other water management solutions?

- Assess the suitability of tree protection proposals, including the fencing and ground protection that will be used throughout the demolition and construction phases of development.

  Can CellWeb™ be used as ground protection throughout the development period and also form the foundation for final hard surfaces?

  Is a temporary CellWeb™ installation needed to enable site access for construction traffic over an area designated as requiring tree root protection?

- Consider how utility service installations can be integrated with the installation of CellWeb™.

  Can services be installed before the CellWeb™ is laid, or is it possible to use directional drilling later on in the development?

- Consider how other water management solutions for the site can be integrated with CellWeb™, including porous hard surfaces, drainage and underground storage.

  Has a combined and integrated water management plan been designed that considers retained trees?

  Do the water management solutions for the site consider the water requirements of retained trees?

  Do the storage solutions allow for the slow release of water into areas of the site accessible by tree roots, while also dealing with potential soil pollutants from surface water run-off?

- How are the developers going to ensure that the CellWeb™ is specified and installed effectively?

Geosynthetics

Fleming Road
Harrowbrook Industrial Estate
Hinckley, Leicestershire
LE10 3DU

T: 01455 617 139
F: 01455 617 140
E: sales@geosyn.co.uk

Stage 2 Approval of the CellWeb™ site-specific installation method statement, which should include:

- Details of the sensitive removal of existing hard surfacing.
- Details of any remedial de-compaction work required.
- Root investigation procedures where site level changes require limited excavation to allow the installation of CellWeb™.
- A scaled site plan illustrating where the CellWeb™ will be installed that includes both existing and proposed levels.
- Details of how the CellWeb™ tree root protection system will be integrated with other traditional hard surface foundations on site.
- An integrated water management site plan illustrating working porous surfaces, drainage and water storage solutions, with consideration of the physical presence of roots and tree water requirements.
- Details of the CellWeb™ load limit specifications, with site-specific information.
- Engineering drawings provided by Geosynthetics showing the CellWeb™ specification.
- An engineering design indemnity policy based on a site-specific soil assessment.

Stage 3 Site visit before CellWeb™ installation to check that the ground has been prepared in accordance with the AMS. Check:

- Site level layout.
- The need for root investigations where excavation work is required to meet level requirements.
- Soil bulk density (compaction) CBR has been maintained.
- Completion of any site remedial work required before the installation of CellWeb™.

Stage 4 Site visit to check that materials supplied for installation comply with the installation method statement and AMS specifications. Check:

- The specification of the geotextile underlay.
- The specification of the cellular confinement system (depth and product used).
- The specification of the fill material (4/20, 20/20 or 20/40 washed angular stone with site-specific pH if required and appropriate structural load rating).

Stage 5 Site visit to check that the installation methodology meets the manufacturer's specification and is in accordance with the AMS. Check:

- The minimum cell size.
- The orientation of the sheet layout.
- There is sufficient fill to form a cell structure.
- The upper geotextile has been installed to maintain the CellWeb™ sandwich.

Stage 6 Site visit to check that the final surface installation meets the porosity specification in the installation method statement and the AMS.

Stage 7 Project sign off.

Following this checklist should ensure the successful specification and installation of CellWeb™ as a tree root protection system, either as a temporary ground covering during development or as a structural sub-base for permanent porous hard surfaces.

This checklist has been written to enable Local Authority Tree Officers to plan site visits and document checks in a structured way. However, the same procedure can be completed by an independent arboricultural consultant as part of a certification program offered by Geosynthetics Ltd using dedicated arboricultural consultants and approved installers.

Geosynthetics

Fleming Road
Harrowbrook Industrial Estate
Hinckley, Leicestershire
LE10 3DU

T: 01455 617 139
F: 01455 617 140
E: sales@geosyn.co.uk

Geosynthetics Ltd
Fleming Road
Harrowbrook Industrial Estate
Hinckley, Leicestershire
LE10 3DU
Tel 01455 617139 Fax 01455 617140
sales@geosyn.co.uk
www.geosyn.co.uk

Method Statement

For The Installation of Cellweb Tree Root Protection System.

When considering damage to tree roots, in applications of vehicular access and parking, the risk of oxygen depletion caused by compaction of subsoil's, site clearance damaging the root source and type of reinforcement are areas which need to be given due consideration.

Other risk factors are:

- Creating an impermeable surface
- Causing a rise in the water table due to construction
- Increasing ground level
- Contamination of subsoil's

1. Compaction

When looking at site conditions and use, the following information should be considered to enable a load bearing structure capable of supporting traffic to be proposed:

- Californian Bearing ratio (CBR) – Standard test method for measuring soil strength
- Soil types
- Water table
- Maximum load (vehicles)
- Acceptable rut depth
- Reinforcement type — Cellweb Cellular Confinement 150mm deep

Type and Depth of engineered infill material	Clean, angular. Usually 40mm to 20mm.

2. Dig (site strip)

Site stripping does damage some root structure prior to construction; however, the use of no-dig construction elevates the access road requiring edge protection.

3. No dig

3.1. Remove surface vegetation	Use a suitable herbicide suitable for the specific vegetation and not harmful to the tree root system
3.2. Place geotextile separation filtration layer	Use a Treetex T300 non woven Goetextile over the prepared sub-grade. Overlap dry joints by 300mm. The three dimensional cell structure, is formed by ultrasonically welding polyethylene (perforated) strips / panels together to create a three dimensional network of interconnecting cells. A high degree of frictional interaction is developed between infill and the cell wall, increasing the stiffness of the system
3.4. Edge restraint	A treated timber edging is usually acceptable.

4. Cellular Confinement and Backfill Material.

Expand the Cellweb 2.56m wide panels to the full 8.1 metre length. Pin the Cellweb panels with staking pins to anchor open the cells and staple adjacent panels together to create a continuous mattress. Infill the Cellweb with a no fines angular granular fill (typically 4-20mm) within each open cell. The use of cellular confinement reduces the bearing pressure on the subsoil by stabilising aggregate surfaces against rutting under wheel loads. Comparisons between cellular confinement and traditional aggregate and geogrid-reinforced structures demonstrate a 50% reduction in construction thickness of the granular material.

5. Surfacing Options

Block Paving:
5.1. Lay second layer of Treetex T300 Geotextile separation fabric over the infilled Cellweb sections
5.2. Lay sharp sand bedding layer compacted with a vibro compaction plate to recommended depth.
5.3. Place block paviors as per manufacturers instructions.

Tarmac:
Place 25mm surcharge of the granular material above the Cellweb system and lay the bitumen base and wearing courses.

Loose Gravel:
5.4. Ensure Cellweb is completely filled.
5.5. Place decorative aggregate to required depth
NOTE: A treated timber edge should be provided to restrict gravel movement.

Grass Blocks:
5.6. Place second layer of Treetex T300 Geotextile separation fabric over the infilled Cellweb sections
5.7. Place 50/50 rootzone bedding layer to the required depth
5.8. Lay recycled Duo Block 500 Grass Protection System infilled with 50/50 rootzone mix.
5.9. Seed as per architects instructions.
(Alternatively the Grass Blocks may be infilled with gravel.)

Concrete Slab
6.0 Lay Cellweb as previous and place second layer of Treetex Geotextile directly over the filled panels. Pour concrete base as specified.

Below are illustrations of the correct stapling procedure for joining both edges and ends of panels together;

Panel Edges:

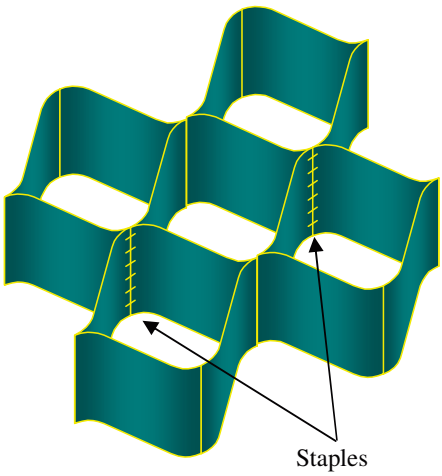

Panel Ends: