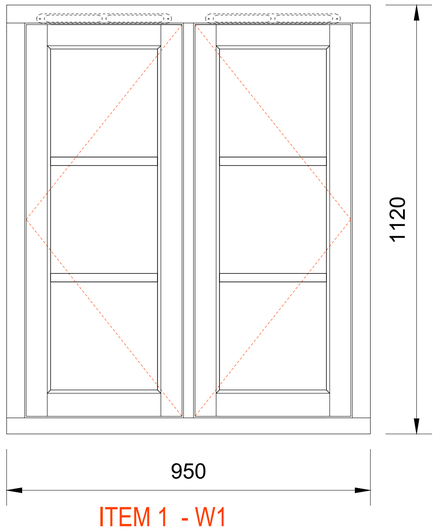

ITEM 1 - W1

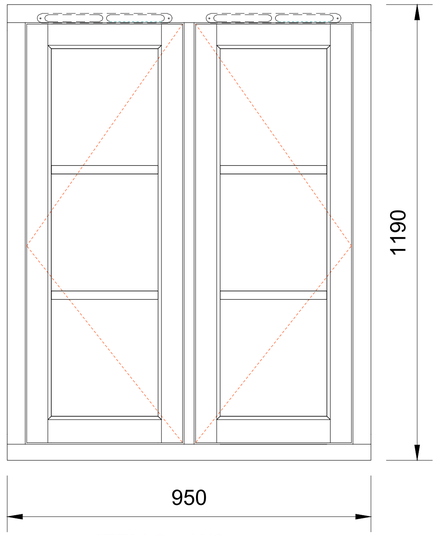

ITEM 2 - W2

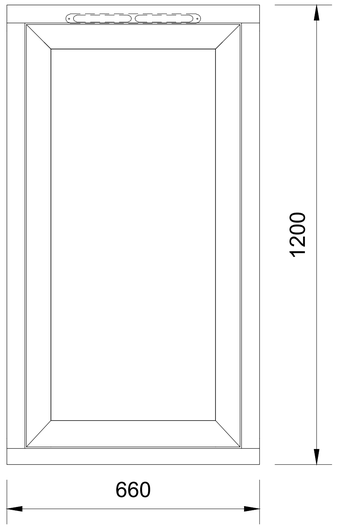

ITEM 3 - W3

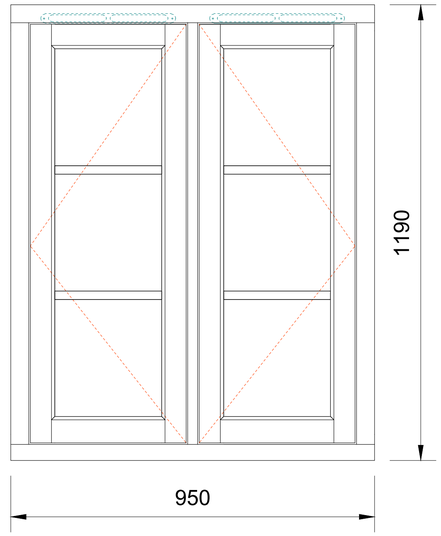

ITEM 4 - W4

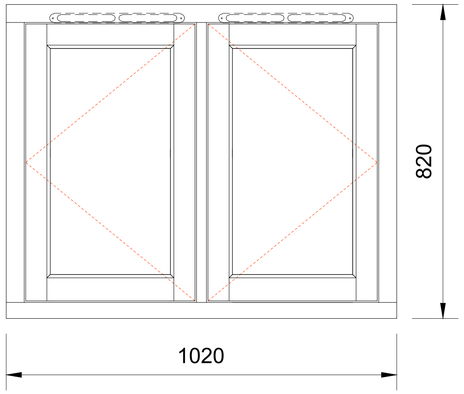

ITEM 5 - W18

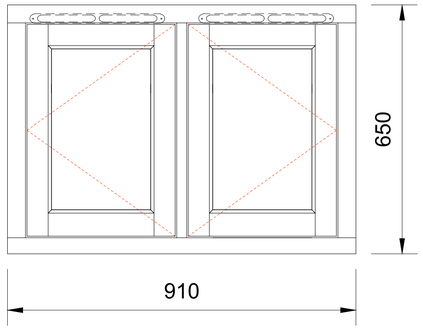

ITEM 6 - W19

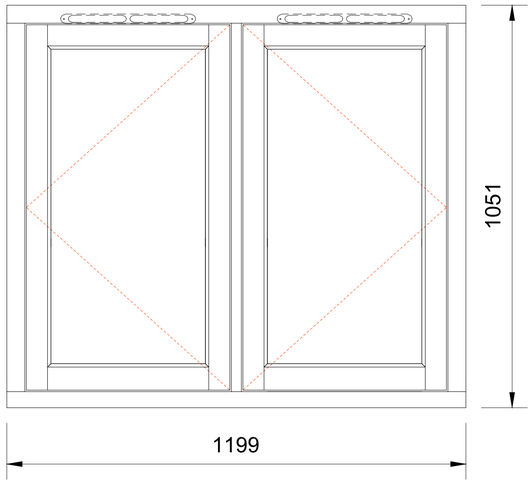

ITEM 7 - W21

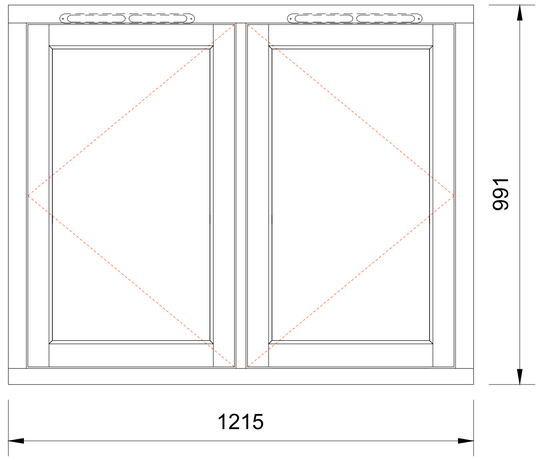

ITEM 8 - W22

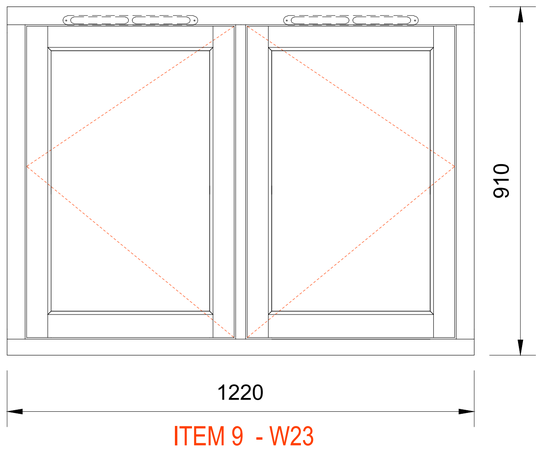

ITEM 9 - W23

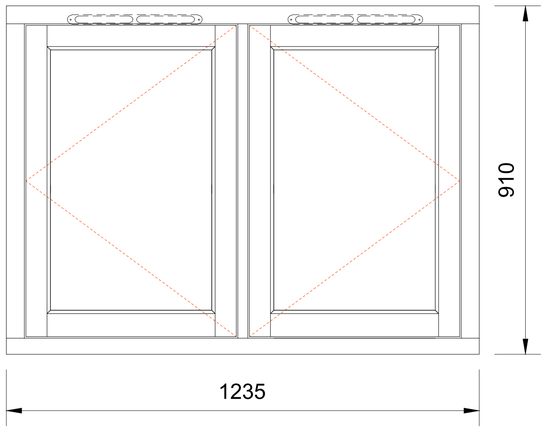

ITEM 10 - W24

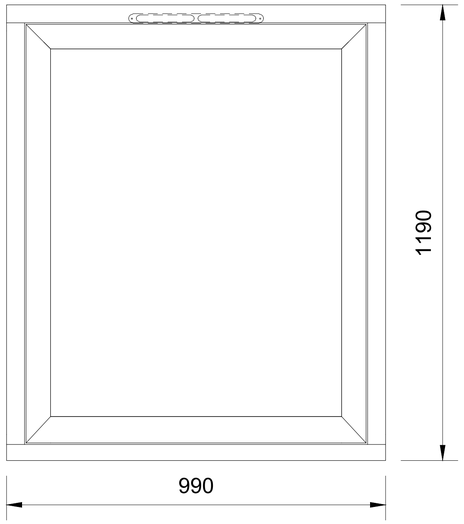

ITEM 11 - W26

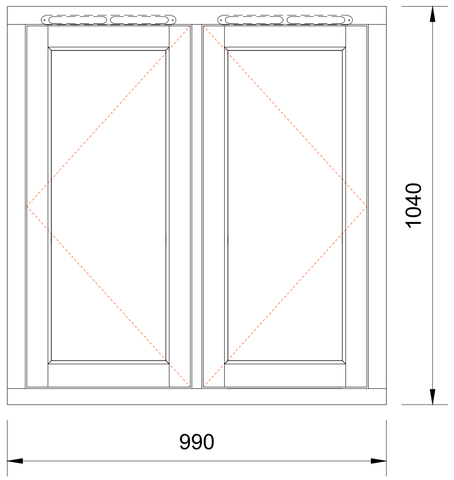

ITEM 12 - W27

Mumford & Wood reserves the right to change specifications and introduce design improvements at any time and without notice.

NOTES:

1. All elevations are represented externally unless otherwise stated.
2. Site dimensions to be verified prior to construction.
3. Report all discrepancies to M&W immediately.
4. Read in conjunction to all relevant documents and drawings.
5. All tolerances are to Mumford & Wood Standard Tolerance definitions (see supporting document for more detail) unless stated on the drawing.
6. Mumford & Wood Ltd all rights reserved ©

All drawings are in millimeters. Do not scale. This drawing is the property of MUMFORD & WOOD LTD. It must not be used, copied or reproduced without permission. © Copyright Mumford & Wood 2022

Mumford & Wood Limited

MUMFORD & WOOD
EST. 1954

Address:
Mumford & Wood Limited
Tower Business Park, Kelvedon Road,
Tiptree, Essex CO5 0LX

Contact Details:
T: (01621) 818155
W: www.mumfordwood.com
E: sales@mumfordwood.com

Customer: SPORN CONSTRUCTION LTD.
Project No: 20075964

Drawing Title:
HOME FARM - TYPICAL ELEVATIONS

ITEMS: 1-12

Date of Creation: 26/07/2022
Scale @ A1: 1:4 & 1:10
Drawn By: SG

Revision: 001

REVISIONS

Rev	By	Date	Description

	Production	Customer
Approved By		
Sign & Date		