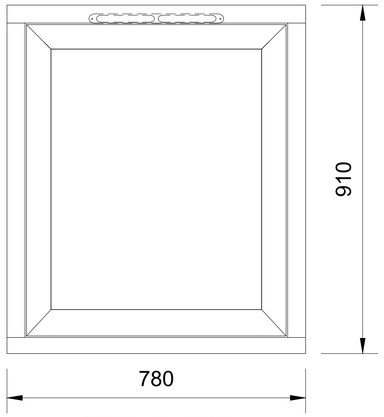

ITEM 13 - W28

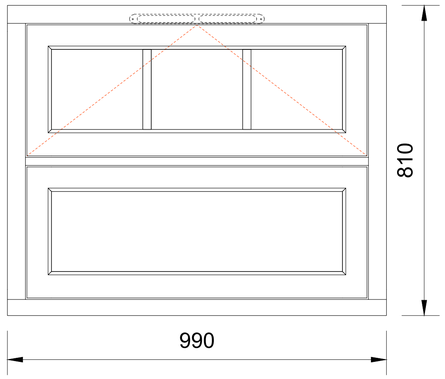

ITEM 14 - W29

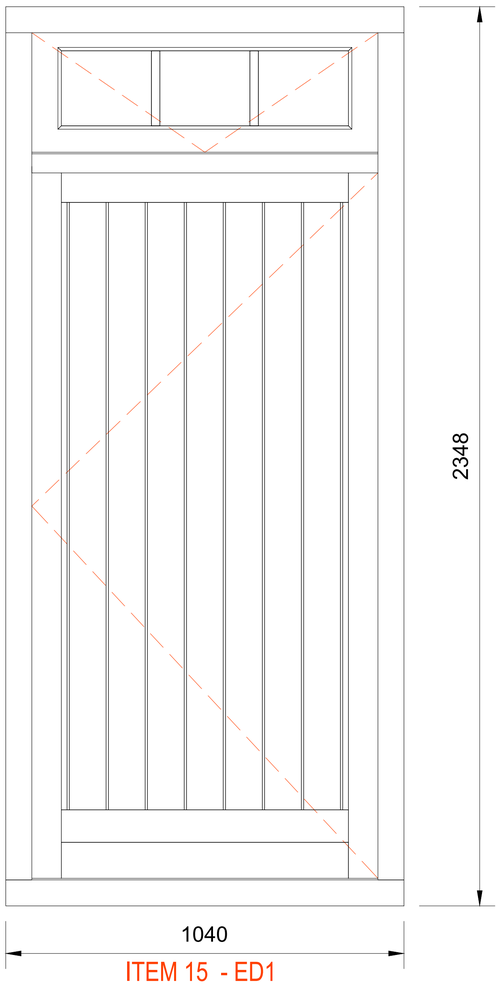

ITEM 15 - ED1

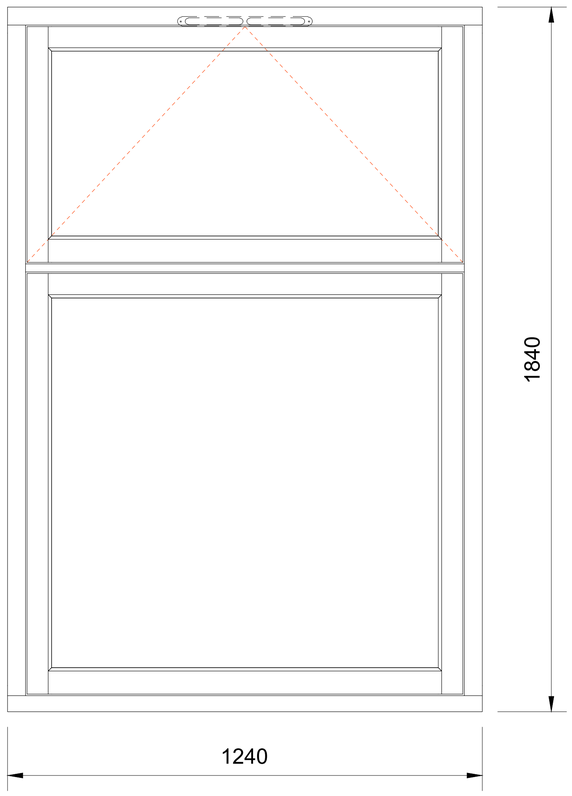

ITEM 16 - ED2

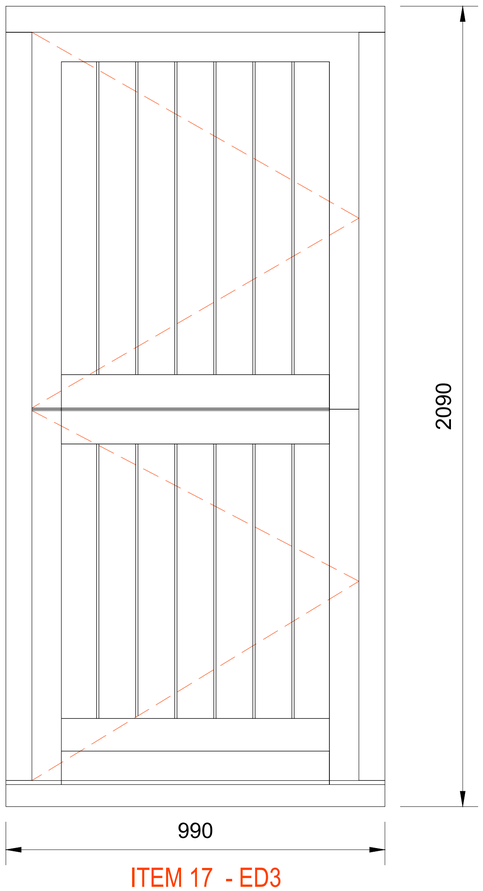

ITEM 17 - ED3

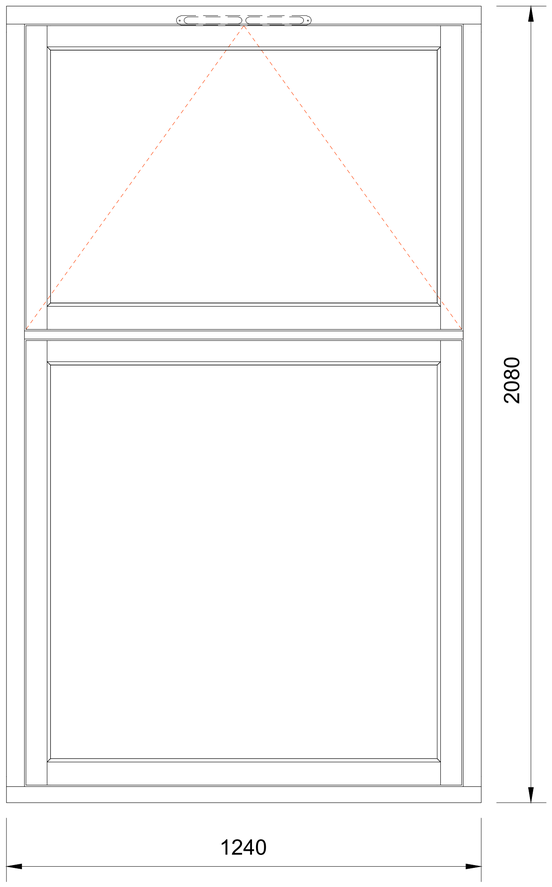

ITEM 18 - ED4

NOTES:

1. All elevations are represented externally unless otherwise stated.
2. Site dimensions to be verified prior to construction.
3. Report all discrepancies to M&W immediately.
4. Read in conjunction to all relevant documents and drawings.
5. All tolerances are to Mumford & Wood Standard Tolerance definitions (see supporting document for more detail) unless stated on the drawing.
6. Mumford & Wood Ltd all rights reserved ©

All drawings are in millimeters. Do not scale. This drawing is the property of MUMFORD & WOOD LTD. It must not be used, copied or reproduced without permission. © Copyright Mumford & Wood 2022

Mumford & Wood Limited

Address:
Mumford & Wood Limited
Tower Business Park, Kelvedon Road,
Tiptree, Essex CO5 0LX

Contact Details:
T: (01621) 818155
W: www.mumfordwood.com
E: sales@mumfordwood.com

Customer: SPORN CONSTRUCTION LTD.
Job No.: 20075964
Drawing Title: HOME FARM - TYPICAL ELEVATIONS

ITEMS: 13-18

Date Created: 26/07/2022
Scale: 1:4 & 1:10
Drawn by: SG

002

REVISIONS

Rev	By	Date	Description

	Production	Customer
Approved By		
Sign & Date		

Mumford & Wood reserves the right to change specifications and introduce design improvements at any time and without notice.