ELEVATIONS VIEWED FROM OUTSIDE

SYSTEM

ROOFLIGHT MANUFACTURED FROM 3.5mm THICK MILD STEEL SHEET CURB PRESSINGS AND 3mm THICK MILD STEEL SHEET VENT PRESSINGS

CORNERS MITRED AND FULLY WELDED

FINISH

POLYZINC 770 AFTER ALL FABRICATION.
POWDER COATED TO BS6497 / BS EN 13438
POLYESTER POWDER COATED RAL 9005 (BLACK) MATT

HARDWARE & ATTACHMENTS

1PAIR. WELD-ON HINGES
FITTED WITH WELDED MOUNTING PLATES TO FRAME AND VENT PROFILES TO ACCOMODATE VENT OPERATOR.

GLAZING

PREPARED FOR & SUPPLIED WITH CLEMENT 24mm SEALED UNITS, WITH STEPPED BOTTOM EDGE; WITH SILICONE SEALANT

SPACER BAR - SILVER
SILICONE CAPPING - BLACK.
PERIMETER POINTING - BLACK.

GLASS SPECIFICATION:-

OUTER - 4mm TOUGHENED BIOCLEAN II (SELF CLEANING GLASS)
CAVITY - 16mm ARGON
INNER - 4mm TOUGHENED THERMOFLOAT (STEPPED BACK AT BOTTOM BY 55mm)

DIM CHART	Overall Size W x H	Aperture Size W x H	Between Timber Trimmers W x H
Clement T SH	960 x 1270	652 x 962	730 x 1026

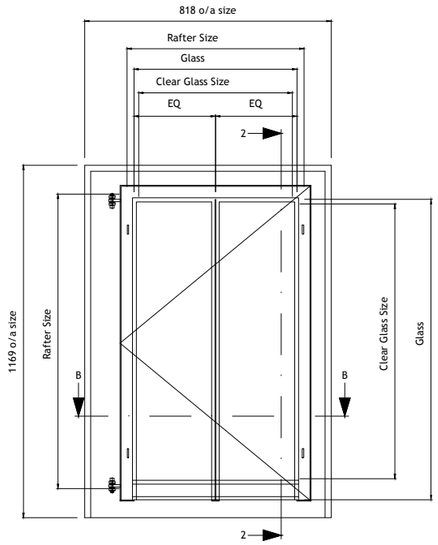

TILE ROOF
APPLICATION

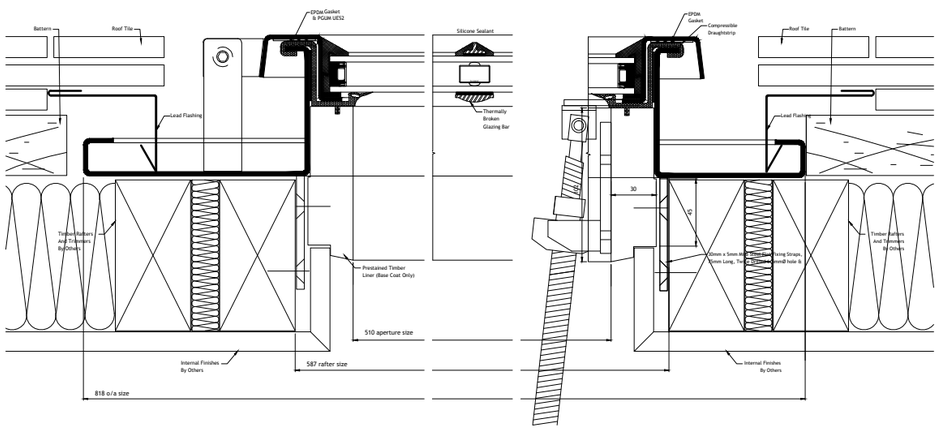

HALF FULL SIZE
@ A1

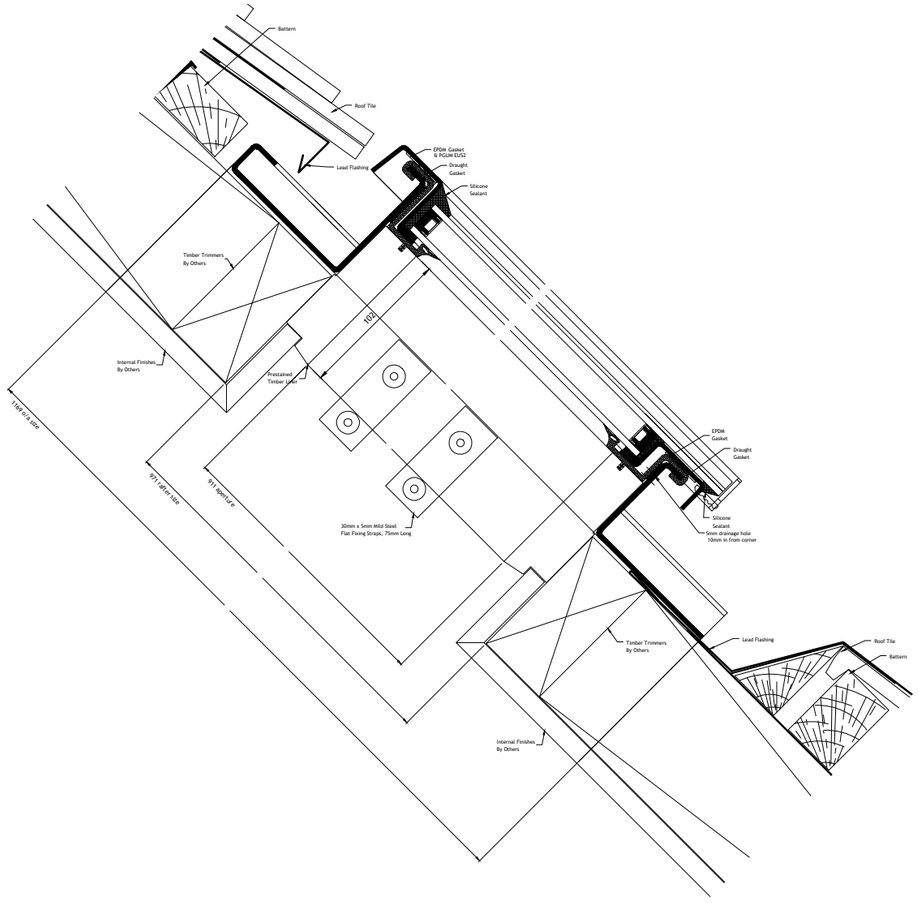

HALF FULL SIZE
@ A1

Copyright Reserved 2013
CLEMENT WINDOWS LTD
This product is protected by the provisions of the Copyright, Design & Patents Act 1988
This drawing is the property of Clement Windows Ltd.
It is forbidden to copy, re-produce or use these details in any way (including transfer to another party) without the express authority/permission of Clement Windows Ltd in writing.

NOTES.

1. DO NOT SCALE
2. PLEASE NOTE THAT ALL PRODUCT ARE SUBJECT TO MANUFACTURING TOLERENCE OF +0mm / -2mm

DATE	REV	INT	COMMENTS

REVISIONS

For Information

Drawing Title
CLEMENT CONSERVATION ROOFLIGHT
TILE APPLICATION
SIDE HUNG
SHEET 1

Project/Site

Contractor/Client
ROOFLIGHT DEPARTMENT

Architect

Scale @ A1: 1:2 & 1:10 | **Drawn By:** -
Date: 24-05-17 | **Checked by:** -

CLEMENT

Clement House
Haslemere
Surrey, GU27 1HR
Tel: 01428 643393
Fax: 01428 644436
E-mail: Info@clementwg.co.uk

Drawing No. D-CRPM-08

Revision