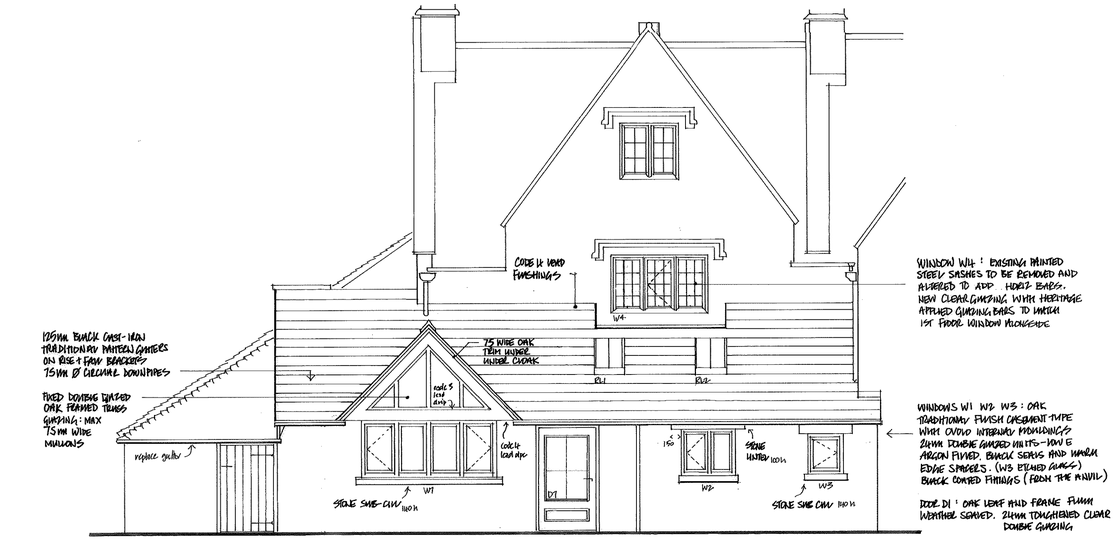

REAR · WEST ELEVATION 1:50

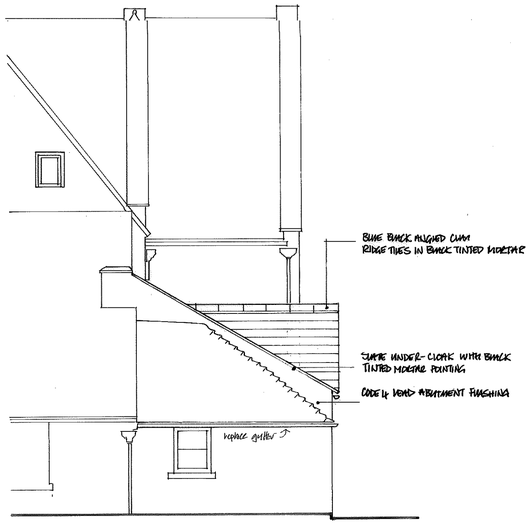

END · NORTH ELEVATION

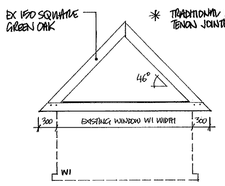

Window W1 Gable Truss

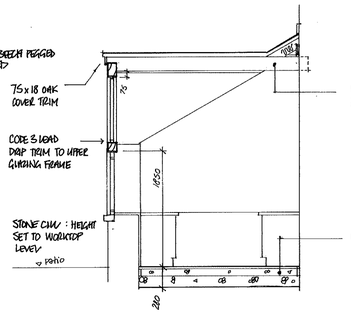

SECTION AA 1:50

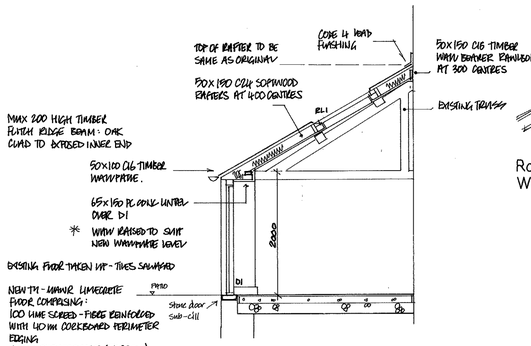

SECTION BB

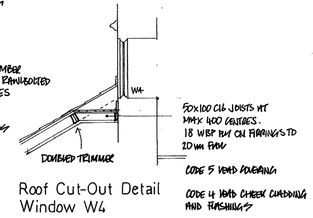

Roof Cut-Out Detail
Window W4

NEW ROOF BUILD UP:

C24 RAFTERS AS NOTED ON SECTION BB

NATURAL BLUE BLACK SLATE NAILED TO 38x25 TREATED BATTENS ON TIVEK SHARD BREATHER MEMBRANE. BLACK EAVES CARRIER TRIM.

100 ISOTEX GA 4100 INSULATION CUT BETWEEN RAFTERS
50 ISOTEX GA 4050 INSULATION TO UNDERSIDE WITH FOIL TAPED JOINTS

500 GAUGE POLYTHENE VAPOUR CONTROL LAYER
12.5 GYPROC FIRESTOP BOARD - JOINTS INTUMESCENT SEALED
9x100 V-JOINTED T&G PAINTED SOFTWOOD BOARD SECRET FIXED

CODE 5 LEAD VALLEYS ON 18mm WBP PLY LINER BOARDS

BLACK TINTED MORTAR POINTED VERGES ON SLATE UNDER CLOAK

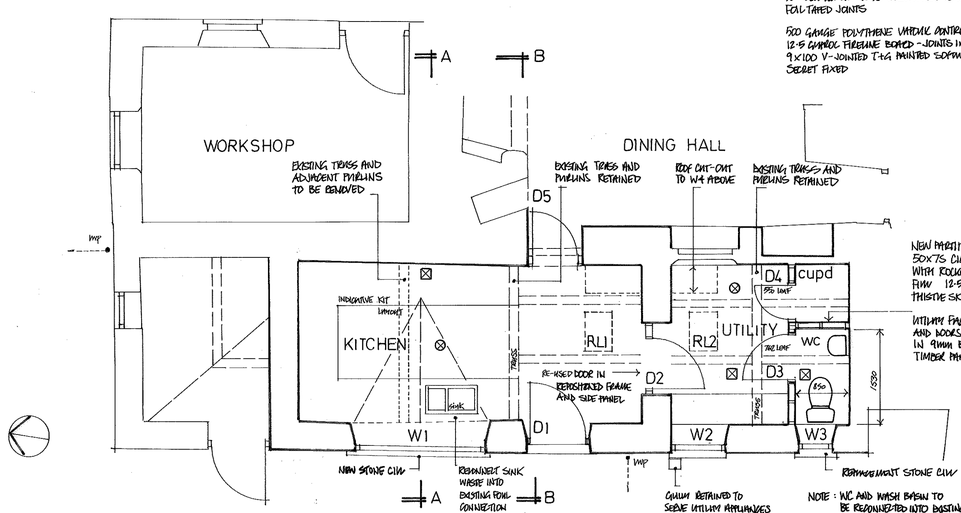

NEW PARTITIONS OFF SLAB + DPC: 50x75 C16 SOFTWOOD STUDWORK WITH ROCKWOOL RW3 SOUND INSULATION FULL 12.5 MR PLASTERBOARD AND THISTLE SKIM FINISH PLASTER

UTILITY FACE OF SEMI PARTITIONS AND DOORS D3 + D4 TO BE FACED IN 9mm WBP + BOARD VERTICAL TIMBER PANELLING (150 CENTRES)

NOTE: WC AND WASH BASIN TO BE REGROUTED INTO EXISTING BELOW FLOOR/GROUND FOUL DRAINAGE

PART GROUND FLOOR PLAN 1:50

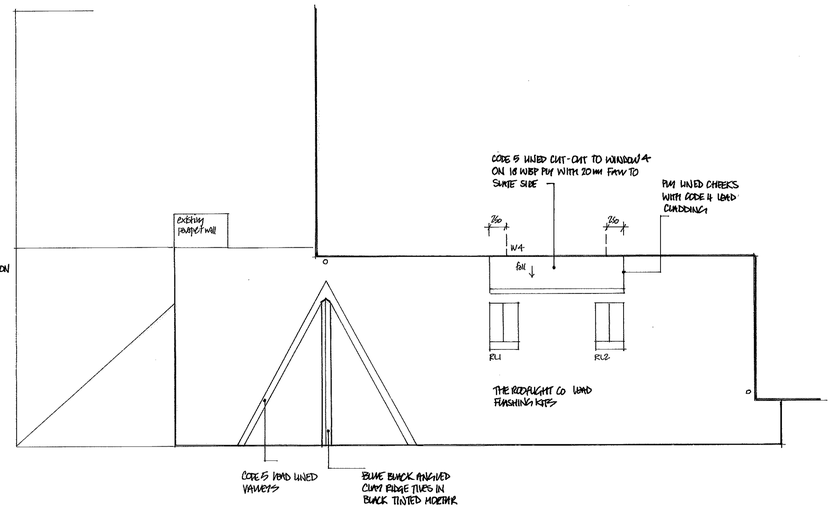

ROOF PLAN 1:50

⊗ CEILING HEAT MAKER DETECTOR: MAINS FED AND LINKED

⊠ EXTRACT FAN: KITCHEN – MIN 30 LITRES/SEC CANOPY OR SOFFIT TYPE
UTILITY – 15 LITRES/SEC AIRFLOW TO VENT SLATE
WC – 15 LITRES/SEC AIRFLOW QUIETLAIR TO VENT SLATE

RL1 · RL2 THE ROOFLIGHT COMPANY CONSERVATION ROOFLIGHT REF CR08-2 BETWEEN RAFTER TYPE WITH LEAD FLASHING KIT. 150 CHROME ROD OPENER

Planning

This drawing has been prepared for workstages up to planning application purposes only and is not intended "for construction". The 'scale bar' should only be used to check the drawing has been reproduced to the correct size. No responsibility can be accepted for errors made by others in "scaling" from this drawing.

Scale 1:50 2.5m

Tyack Architects Ltd own copyright of the original design work in the drawings, documents and digital files which cannot be copied, loaned or disclosed without written agreement. Please refer to our Standard Terms of Business.

Copyright © Tyack Architects Ltd

Tyack Architects Ltd
The Mann Institute
Oxford Street
Moreton-in-Marsh
Gloucestershire, GL56 0LA

t: 01608 650 490
f: 01608 651 863
e: mail@tyackarchitects.com
w: tyackarchitects.com

BUILDING REGULATIONS
Alterations to: Kitchen & Utility Room
Manor Farm, Andoversford
Mr & Mrs Swadling
Scale: 1:50@A1 **Date:** March 2023
Drawn/Checked: RJ/CB **Drg No:** 3067-101 **Rev:**