Copyright this document contains confidential and proprietary information that cannot be reproduced or divulged, in whole or in part, without written consent from: INGENT CONSULTING ENGINEERS LTD.

NOTES

1. INSPECTION CHAMBER COVERS AND FRAMES AS FOLLOWS:-

BRICKWORK AND PRECAST CONCRETE –

i) PRIVATE DRIVES ACCEPTING VEHICLE TRAFFIC: BS EN 124 CLASS D400, 600mm CLEAR OPENING, SOLID TOP COVER AND FRAME.
ii) FOOTPATHS, VERGES AND GARDENS: BS EN 124 CLASS B125, 600mm CLEAR OPENING, SOLID TOP COVER AND FRAME.

POLYPROPYLENE –

iii) AREAS ACCEPTING VEHICLE TRAFFIC: CLASS B
iv) SOFT LANDSCAPED AREAS: CLASS C

2. MORTAR HAUNCHING TO INSPECTION CHAMBER AND FRAMES.

3. i) FOR USE WITH BRICK INSPECTION CHAMBERS IN NON–ADOPTED ROADS, PRIVATE DRIVES, FOOTWAYS AND VERGES; HEAVY DUTY (150mm NOMINAL THICKNESS) PRECAST REINFORCED CONCRETE COVER SLAB TO BS 5911, BEDDED ON 10mm THICK MORTAR BED; OR 150mm GRADE C25P INSITU CONCRETE (REINFORCED WITH A393 MESH TO BS 4483) COVER SLAB.
OTHER LOCATIONS INACCESSIBLE TO VEHICLES;
LIGHT DUTY (75mm NOMINAL THICKNESS) PRECAST REINFORCED CONCRETE COVER SLAB TO BS 5911, BEDDED ON 10mm THICK MORTAR BED; OR 100mm GRADE C25P INSITU CONCRETE (REINFORCED WITH A193 MESH TO BS 4483) COVER SLAB.

ii) FOR USE WITH PRECAST CONCRETE INSPECTION CHAMBERS IN NON ADOPTED ROADS, PRIVATE DRIVES, FOOTWAYS AND VERGES; HEAVY DUTY (150mm NOMINAL THICKNESS) PRECAST REINFORCED CONCRETE COVER SLAB TO BS 5911, OF SIZE AND TYPE TO SUIT CHAMBER SECTIONS.

OTHER LOCATIONS INACCESSIBLE TO VEHICLES:
LIGHT DUTY (75mm NOMINAL THICKNESS) PRECAST REINFORCED CONCRETE COVER SLAB TO BS 5911, OF SIZE AND TYPE TO SUIT CHAMBER SECTIONS.

4. WITH PRECAST OR BRICK INSPECTION CHAMBERS, COVER SLABS WITH A CLEAR OPENING OF 600x600mm ARE REQUIRED. OFFSET TO SUIT CHOSEN FACE FOR STEP RUNGS.

5. 215mm THICK WALLS IN CLASS B ENGINEERING BRICKS TO BS 3921 LAYERED IN ENGLISH BOND WITH FROGS UP. INNER FACES TO BE PLUMB AND IN TRUE ALIGNMENT. BRICK COURSE TO BE LEVEL. FLUSH JOINTING TO BRICKWORK INNER FACES AND PRECAST CONCRETE CHAMBER SECTIONS TO BS 5911.

6. ALL STEP RUNGS TO BS 1247

i) GENERAL PURPOSE PATTERN (WITH 230mm TAIL) TO BE BUILT INTO CHAMBER WALL OF BRICK INSPECTION CHAMBERS.

ii) PRECAST CONCRETE MANHOLE PATTERN "LET IN" TO CHAMBER WALL OF PRECAST INSPECTION CHAMBERS. ALL STEP RUNGS TO BE HORIZONTALLY AND VERTICALLY STAGGERED. STEP RUNGS ARE NOT REQUIRED TO EITHER TYPE OF INSPECTION CHAMBER WHERE DEPTH TO SOFFIT IS LESS THAN 750mm.

7. MASS CONCRETE INFILL.

8. BENCHING TO RISE VERTICALLY FROM EDGES OF CHANNEL TO A HEIGHT NOT LESS THAN PIPE (FULL SECTION) SOFFIT LEVEL. STEEL FLOAT SMOOTH HARD SURFACE WITH CEMENT MORTAR 1:1 MIX, 25mm THICK.

9. 50mm MIN.THICK MORTAR BED TO HALF ROUND CHANNELS.

10. 150mm MIN. THICK MASS CONCRETE BASE SLAB (GRADE C20P) TO PRECAST, uPVC AND BRICK TYPES OF INSPECTION CHAMBER.

11. 75mm THICK LEAN MIX CONCRETE BLINDING.

12. MINIMUM OF 2, AND MAXIMUM OF 4 COURSES OF 215mm THICK ENGINEERING BRICKS (CLASS B) TO UNDERSIDE OF COVER & FRAME, BUILT OFF COVER SLAB, MAY BE REQUIRED TO FACILITATE ROAD OR DRIVE CONSTRUCTION.

13. A BRICK RELIEVING ARCH SHALL BE TURNED OVER ALL PIPES WHERE THEY PASS THROUGH THE WALLS OF A BRICK INSPECTION CHAMBER.

14. PIPES ENTERING INSPECTION CHAMBERS SHALL HAVE A FLEXIBLE JOINT WITHIN 150mm OF THE OUTER FACE OF THE BRICKWORK OR CONCRETE SURROUND.

15. CHANNEL JUNCTIONS WITHIN BRICK OR PRECAST CONCRETE INSPECTION CHAMBERS TO BE HALF ROUND CHANNEL SECTIONS.

16. BACKFILL MATERIAL TO BE AS DETAILED ABOVE FOR NORMAL PIPE BEDDING.

17. FOLLOWING THE FLEXIBLE JOINT FROM EITHER A PRECAST OR BRICK INSPECTION CHAMBER (NOTE 14 ABOVE) A 'ROCKER' PIPE OF 600mm LENGTH SHALL BE INSTALLED.

18. PRECAST CONCRETE INSPECTION CHAMBERS MAY (IF CHOSEN FOR USE) HAVE A PURPOSE MADE BASE UNITS.

19. WHERE PRECAST CONCRETE INSPECTION CHAMBERS ARE CONSTRUCTED WHOLLY ABOVE THE WATER TABLE, JOINTS ARE TO BE SEALED WITH MORTAR. IN WATERLOGGED GROUND OR WHERE THE WATER TABLE IS ABOVE THE BASE SLAB, JOINTS ARE TO BE WATER TIGHT USING A MASTIC SEALANT OR RUBBER RINGS OF A TYPE SUITABLE TO THE CHAMBER UNITS.

20. FORMATION OF TRENCH BEDS AND INSPECTION CHAMBERS

i) EXCAVATE IMMEDIATELY BEFORE LAYING BEDS AND PIPES OR BASE SLABS FOR INSPECTION CHAMBERS.

ii) REMOVE ALL MUD, ROCK PROJECTIONS, BOULDERS AND HARD SPOTS AND REPLACE WITH WELL–COMPACTED SELECTED FILL. LOCALISED SOFT SPOTS ARE TO BE HARDENED BY TAMPING IN GRANULAR BEDDING MATERIAL.

iii) IF OIL CONTAMINATION IS FOUND ADJACENT TO TRENCH, THE TRENCH PROFILE IS TO BE CUT BACK BY 150mm FROM THE FACE OF BEDDING MATERIAL AND REPLACED WITH CRUSHED CONCRETE.

21. CONCRETE AND MORTAR

THE CONCRETE USED TO SURROUND PIPES AND IN THE CONSTRUCTION OF GULLIES AND INSPECTION CHAMBERS IS TO BE GRADE C20P (UNLESS NOTED OTHERWISE) AND MIXED USING SRPC UNLESS DIRECTED OTHERWISE BY THE ENGINEER OR LOCAL AUTHORITY. SULPHATE RESISTANT CEMENT IS TO BE USED FOR INSITU OR PRECAST CONCRETE AND MORTARS TO FOUL DRAINS.

22. COVERS AND FRAMES

ALL INSPECTION CHAMBER COVER AND FRAMES ARE TO BE LAID TO HAVE THE TOP SURFACE IN ALIGNMENT WITH BOTH THE LONGITUDINAL AND TRANSVERSE GRADIENTS OF ADJACENT ROADS, DRIVES, FOOTWAYS AND VERGES. THEY ARE OTHERWISE TO BE LAID LEVEL. ALL COVER LEVELS AS SHOWN ON THE DRAINAGE LAYOUT/LONG SECTION ARE APPROXIMATE. ACTUAL COVER LEVELS ARE TO BE DETERMINED ON SITE FROM THE POSITION IN THE ROAD, DRIVE, FOOTPATH OR OTHERWISE.

23. PIPES TO AS FOLLOWS:

PIPE DIA.	TYPE	REMARKS
100mm INTERNAL (110mm NOM. DIA.)	uPVC	BS EN 1401
150mm INTERNAL (160mm NOM. DIA.)	uPVC	BS EN 1401

24. THE CONTRACTOR/DEVELOPER IS TO ENSURE THAT ALL OF THE WORKS COMPLY WITH THE FOLLOWING:

i) BS 8301: 1985 (CODE OF PRACTICE FOR BUILDING DRAINAGE)

ii) THE BUILDING REGULATIONS: APPROVED DOCUMENT H 2002

iii) NHBC TECHNICAL REQUIREMENTS

iv) BRE DIGEST No. 363

25. THE STORAGE AND INSTALLATION OF ALL PROPRIETARY DRAINAGE ITEMS USED ARE TO BE STRICTLY IN ACCORDANCE WITH THE MANUFACTURERS INSTRUCTIONS.

26. ALL uPVC ITEMS AS SPECIFIED ON THIS DRAWING ARE TO COMPLY WITH BS EN 1401.

27. MORTAR SHALL BE MIXED ONLY AS AND WHEN REQUIRED, THE RELEVANT PROPORTIONS INDICATED IN THE FOLLOWING TABLE, UNTIL ITS COLOUR AND CONSISTENCY ARE UNIFORM. THE CONSTITUENT MATERIALS SHALL BE ACCURATELY GAUGED, ALLOWANCE BEING MADE FOR BULKING OF SAND.

ALTERNATIVE NOMINAL MIXES BY VOLUME		
CEMENT : LIME : SAND	CEMENT : SAND	CEMENT : SAND WITH PLASTICISER
1 : ¼ : 3	1 : 3	1 : 2 ½ TO 3

28. READY–MIXED LIME : SAND FOR MORTAR AND READY–TO–USE RETARDED MORTAR SHALL COMPLY WITH THE RELEVANT PROVISIONS OF BS 4721 AND TO BE OF CATEGORY 1.12 AND DESIGNATION (i) RESPECTIVELY.

29. ALL MORTAR SHALL BE CONVEYED FRESH TO THE WORKS AS REQUIRED FOR USE. MORTAR WHICH HAS BEGUN TO SET OR WHICH HAS BEEN SITE–MIXED FOR A PERIOD OF MORE THAN 1 HOUR SHALL NOT BE USED. PLASTICISING AND SET RETARDING MORTAR ADMIXTURES SHALL COMPLY WITH BS 4887 : PART 1 AND 2, RESPECTIVELY AND SHALL BE SUPPLIED WITH INSTRUCTIONS FOR USE.

30. CRUSHED NATURAL STONE AND SHALL COMPLY IN ALL RESPECTS WITH BS 1200.

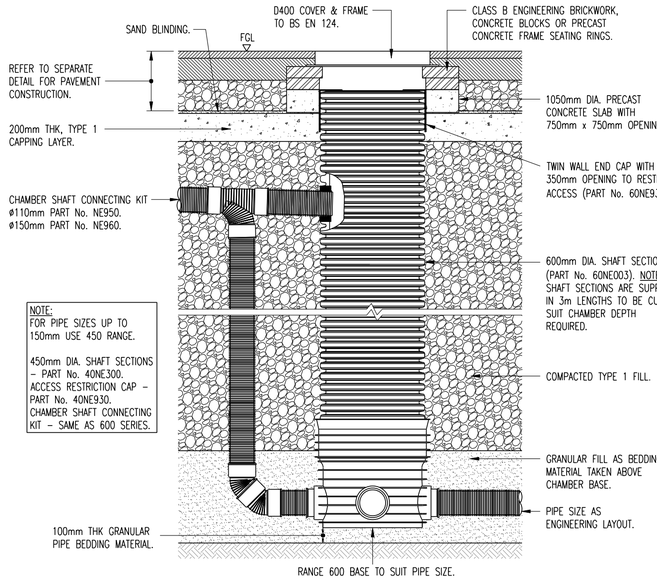

NOTE:
FOR PIPE SIZES UP TO 150mm USE 450 RANGE.

450mm DIA. SHAFT SECTIONS – PART No. 40NE300. ACCESS RESTRICTION CAP – PART No. 40NE930. CHAMBER SHAFT CONNECTING KIT – SAME AS 600 SERIES.

INSPECTION CHAMBER WITH BACKDROP CONNECTION

(450 BASE UP TO 150mmø PIPEWORK – MAX. 3M DEPTH)
(600 BASE UP TO 300mmø PIPEWORK – MAX. 4M DEPTH)

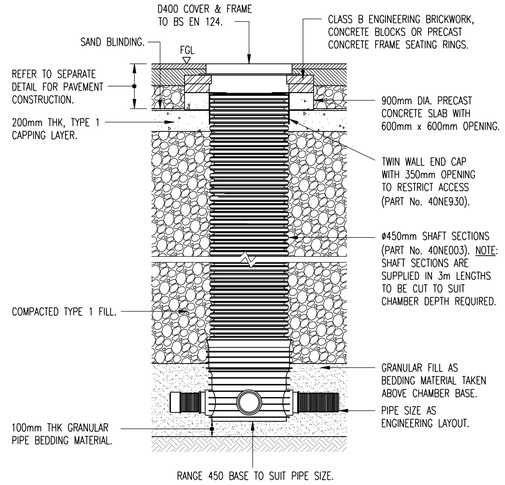

INSPECTION CHAMBER (>1200 DEPTH) (TRAFFICKED AREAS)

(450 BASE UP TO 150mmø PIPEWORK – MAX. 3m DEPTH)
(600 BASE UP TO 300mmø PIPEWORK – MAX. 4m DEPTH)

GENERAL
1. DO NOT SCALE THIS DRAWING. ALL DIMENSIONS ARE IN MILLIMETERS UNLESS OTHERWISE NOTED. ANY DISCREPANCIES ARE TO BE RECORDED AND REPORTED TO THE ENGINEERS IMMEDIATELY.

2. THIS DRAWING IS TO BE READ IN CONJUNCTION WITH ALL OTHER ENGINEERS AND ARCHITECTS DRAWINGS AND THE SPECIFICATION.

3. ALL WORK IS TO BE TO THE SATISFACTION OF THE ENGINEER AND LOCAL AUTHORITY BUILDING CONTROL.

4. THE CONTRACTOR IS RESPONSIBLE FOR AND MUST TAKE ALL NECESSARY PRECAUTIONS TO ENSURE THE STABILITY OF THE WORKS AT ALL TIMES DURING CONSTRUCTION.

5. ALL WORKMANSHIP AND MATERIALS ARE TO BE TO CURRENT BRITISH STANDARDS.

6. ALL SERVICES ARE TO BE LOCATED AND PROTECTED AS NECESSARY BY THE CONTRACTOR PRIOR TO THE COMMENCEMENT OF THE WORKS.

7. ANY EXISTING DETAILS WHICH ARE SHOWN ON THIS DRAWING ARE FOR GUIDANCE ONLY AND ARE TO BE CHECKED ON SITE BY THE CONTRACTOR. ANY VARIATIONS ARE TO BE RECORDED AND REPORTED TO THE ENGINEER IMMEDIATELY.

8. ALL PRIVATE DRAINAGE WORKS ARE TO BE IN ACCORDANCE WITH BUILDING REGULATIONS APPROVED DOCUMENT H – DRAINAGE AND WASTE DISPOSAL (2015 EDITION).

9. ALL PRIVATE CONNECTIONS TO ADOPTABLE SEWERS MUST BE A MINIMUM OF 100mm DIAMETER (FOUL) &150mm DIAMETER (SURFACE) MADE IN VITRIFIED CLAY CONNECTING SOFFIT TO SOFFIT.

10. PRIVATE CRATE INFILTRATION SYSTEMS MUST BE LOCATED AT LEAST 5M AWAY FROM ANY BUILDING, STRUCTURE OR ADOPTABLE HIGHWAY.

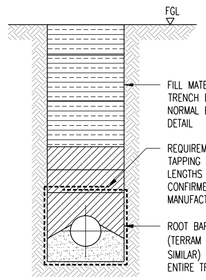

ROOT BARRIER DETAIL

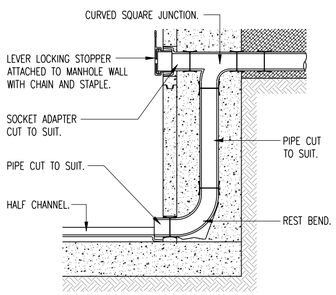

BACKDROP CONNECTION TO MANHOLE

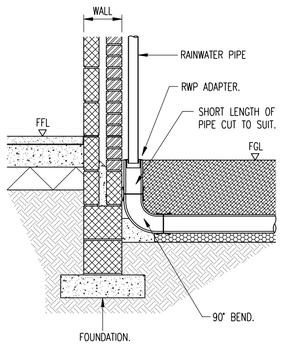

EXTERNAL RAINWATER PIPE CONNECTION

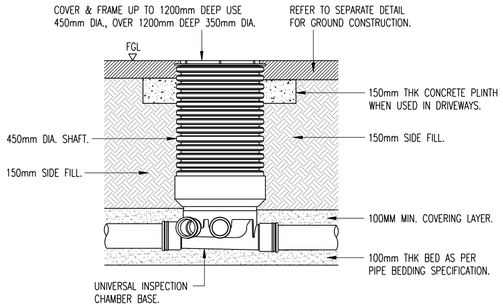

INSPECTION CHAMBER (>1200mm DEPTH) (NON–TRAFFICKED AREAS)

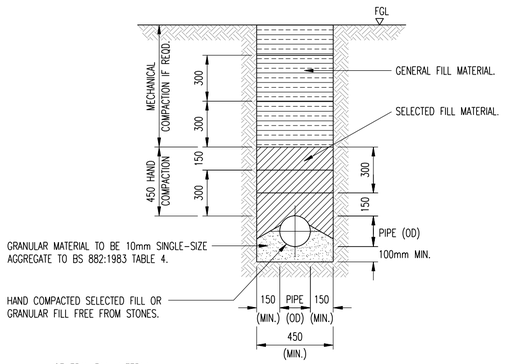

GENERAL FILL MATERIAL
MAY BE OF SELECTED LOCALLY EXCAVATED MATERIAL OR IMPORTED. IT SHALL BE UNIFORM READILY COMPACTED MATERIAL FREE FROM STONES LARGER THAN 40mm DIA. LUMPS OF CLAY OVER 100mm, TIMBER, FROZEN MATERIAL, VEGETABLE MATTER, TREE ROOTS AND BUILDING RUBBISH. THE MATERIAL SHALL BE PLACED AND COMPACTED IN LAYERS NOT EXCEEDING 300mm LOOSE DEPTH. MECHANICAL COMPACTION EQUIPMENT SHALL NOT BE USED UNTIL THERE IS A MINIMUM OF 450mm OF COMPACTED MATERIAL ABOVE THE CROWN OF THE PIPE.

SELECTED FILL MATERIAL
TO BE FREE FROM STONES LARGER THAN 40mm DIA. LUMPS OF CLAY OVER 100mm, TIMBER, FROZEN MATERIAL, VEGETABLE MATTER, TREE ROOTS AND BUILDING RUBBISH. THE MATERIAL SHALL BE PLACED UNIFORMLY ON EACH SIDE OF THE PIPE IN LAYERS NOT EXCEEDING 100mm. EACH LAYER BEING COMPACTED BY HAND TAMPING. CARE TO BE TAKEN NOT TO DISPLACE THE PIPE FROM ITS CORRECT LINE AND LEVEL.

NORMAL BEDDING

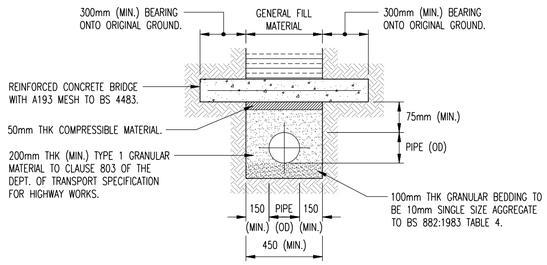

REINFORCED CONCRETE BRIDGING

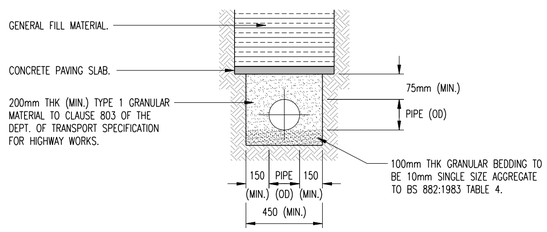

CONCRETE PAVING SLAB BRIDGING

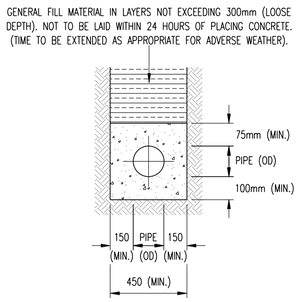

NOTES:
1. 20mm THK 'FLEXCELL' OR SIMILAR APPROVED FILLER TO BE USED TO FORM A FLEXIBLE JOINT TO THE CONCRETE SURROUND AT THE LEADING EDGE OF A SLEEVED COUPLING. DIMENSIONS SHOWN ARE IRRESPECTIVE OF TYPE OR DIAMETER OF PIPE. THE SURROUNDS MUST TERMINATE AT A PIPE JOINT.

2. IF PIPES ARE SURROUNDED IN CONCRETE, THE JOINTS ARE TO BE PROTECTED FROM THE THE INGRESS OF CONCRETE BY WRAPPING THEM IN POLYTHENE SHEET OR BUILDING PAPER.

PIPE PROTECTION IS REQUIRED BY 1 OF THE 3 METHODS DETAILED (PAVING SLAB BRIDGING, REINFORCED CONCRETE BRIDGING OR CONCRETE SURROUND) IN NON TRAFFICKED AREAS WHERE COVER IS <600mm AND 600–900mm ELSEWHERE.

CONCRETE SURROUND

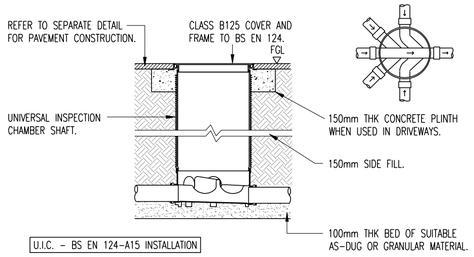

INSPECTION CHAMBER (600–1200mm DEPTH) (TRAFFICKED AREAS)

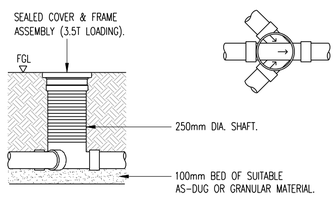

SHALLOW INSPECTION CHAMBER (<600mm DEPTH) (NON–TRAFFICKED AREAS)

Rev	Revision Notes	Dwn	Apvd	Date

INGENT CONSULTING ENGINEERS
Unit 10 Brightwell Barns, Waldringfield Road, Brightwell, Suffolk, IP10 0BJ.

PRELIMINARY

Project:
LAND REAR OF EAST HOUSE
GREAT FINBOROUGH, SUFFOLK

Drawing Title:
PRIVATE DRAINAGE CONSTRUCTION DETAILS
SHEET 1

Client:		Date:
MCNAMARA DEVELOPMENTS		JUN 2023

Drawn:	Designed:	Checked:	Approved:
LB	LB	RGW	RGW

Scale: 1:20 (0.5m 0m 0.5m 1m)

Project No:	Drawing No & Revision:	Size:
2305-819	005	A1