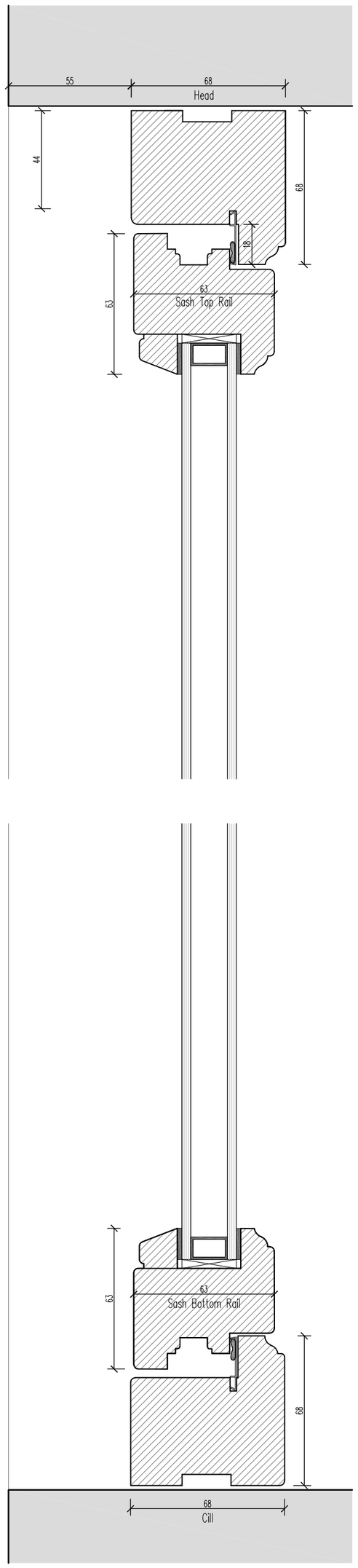

Vertical Window Section 1:2

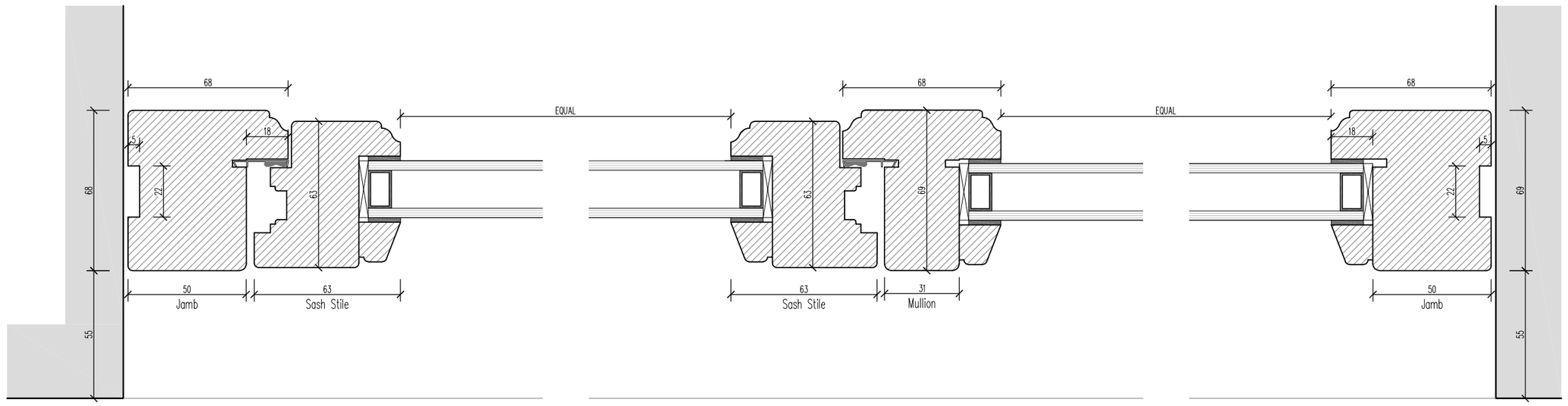

Horizontal Window Section 1:2

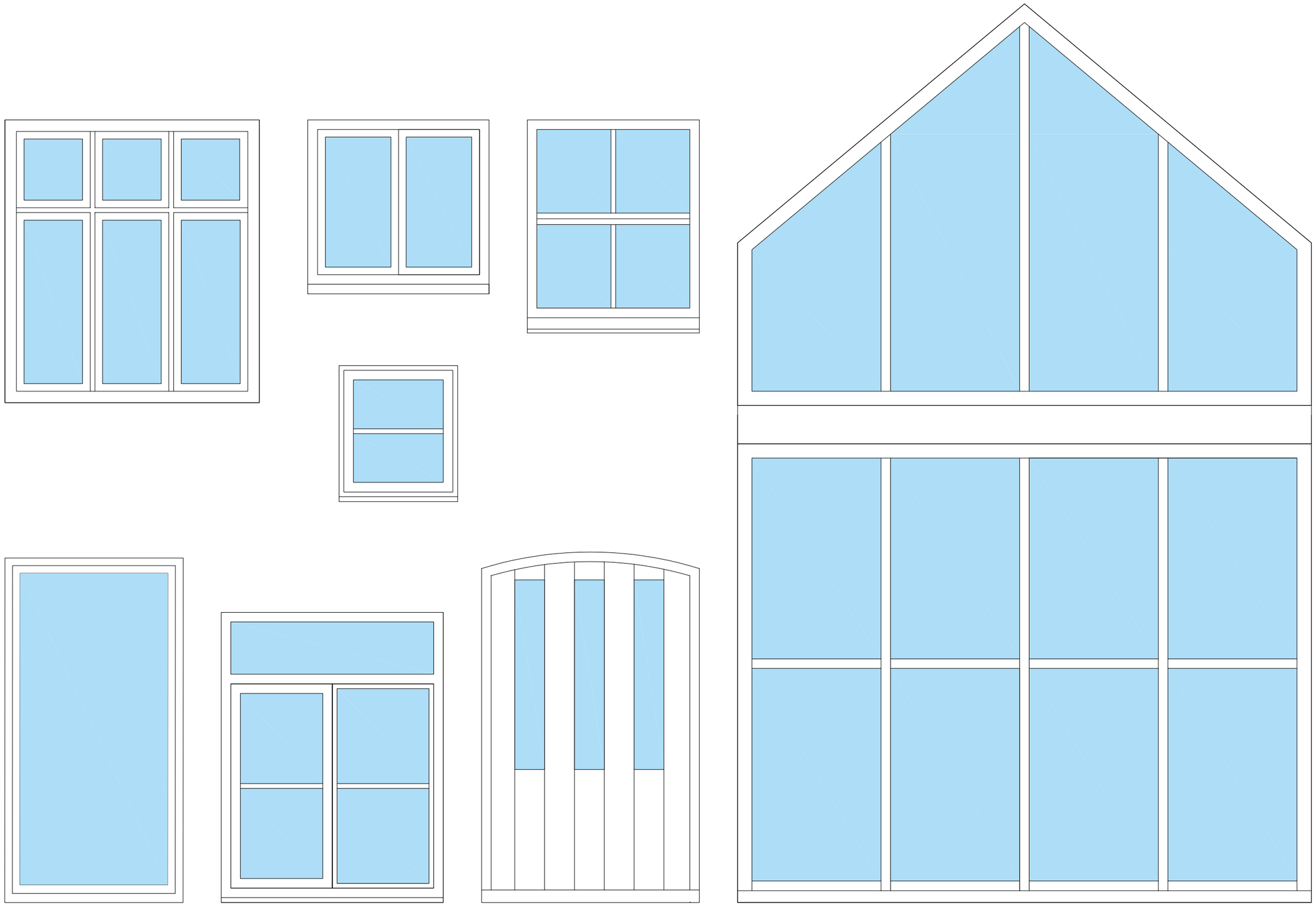

Typical Window Elevations - 1:20

Rev	Amendment	Date

SCALE @ 1:20

0 400m 800m 1200m

SCALE @ 1:2

0 40mm 80mm 120mm

Client:
Mr & Mrs Ford

Project:
Brades Farm, Prees, Shropshire

Title:
Proposed Window Details

Date: July 2023 Scale: 1:20 / 1:2 @ A2

Drwg No. 2948 - PL02 Rev. -

btdesign LTD

9 Tomkys Gardens, Wednesfield,
Wolverhampton, WV11 3NB

Tel: 07540 884006
Email: steve@btdesign.co.uk
Web: www.btdesign.co.uk