W7, W8, W9, W10, W11 to be refurbished and reglazed with double glazing. All frames, astragals, sash and case to be retained and adapted to accommodate double glazing

W6 window to boiler room to be refurbished and reglazed with frosted double glazing. All frames, astragals, sash and case to be retained and adapted to accommodate double glazing

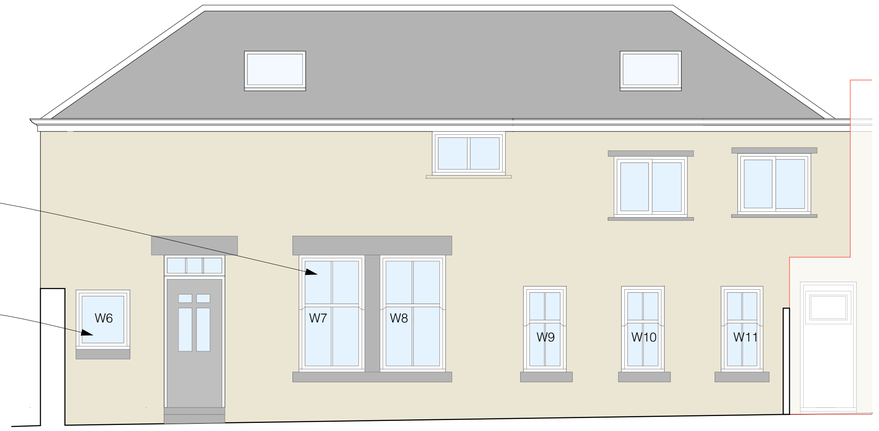


1 Side Elevation 1:100

W5 to be replaced with new double glazed frosted timber windows to match existing style and detailing

W3, W4 to be replaced with new double glazed timber windows to match existing style and detailing

W1 and W2 to be replaced with new double glazed frosted timber windows to match existing style and detailing. Frosted glass to be used as bathroom behind.

Security bars to be removed and any damage to existing stonework repaired

NOTE: All new timber windows to match original windows in both detailing and appearance including opening mechanism, style, frame thickness, materials, glazing rhythm, and proportions

2 Front Elevation 1:100

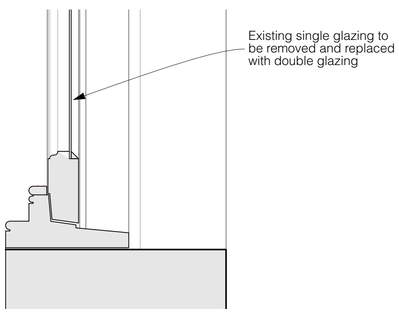


Detail through sash as existing

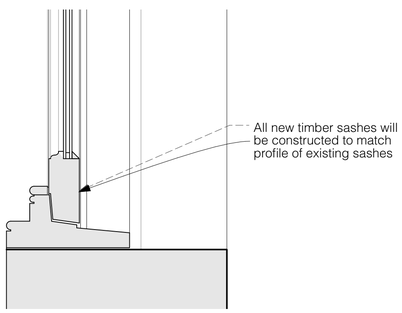


Detail through sash as proposed

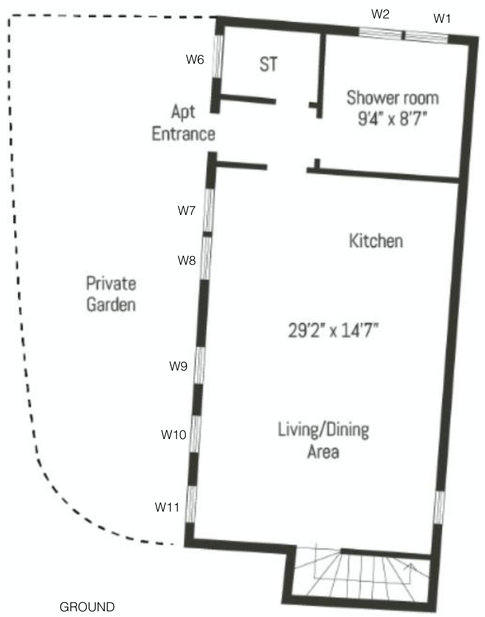


GROUND

Indicative floor plans N.T.S
NOTE: Only window with tag subject to alterations

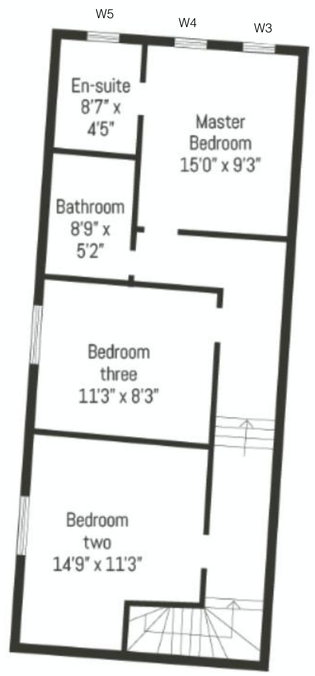


FIRST

Indicative floor plans N.T.S
NOTE: Only window with tag subject to alterations

Key Plan

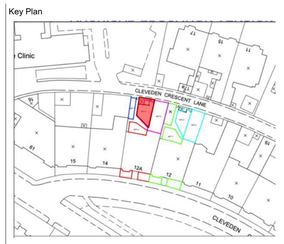


Notes

This document and its design content is copyright ©. It shall be read in conjunction with all other associated project information including models, specifications, schedules and related consultants documents. Do not scale from documents. All dimensions to be checked on site. Immediately report any discrepancies, errors or omissions on this document to the Originator. If in doubt ASK.

| RevID | Issue ID | Issue Name | Issue Date | Issuer-Info | Status | Approved by |
|---|---|---|---|---|---|---|

Scales @ A1: 1:100

Project No: 12_CCL

Status: —

Purpose of Issue: PLANNING

0 1 2 3 4 5

Project
**12CCL**
12a Cleveden Crescent Lane
GLASGOW

Layout Title
**E-01 Elevation**

Client
**Robbie Blackburn**

Drawing Number

| project | originator | volume | level | type | role | number | rev |
|---|---|---|---|---|---|---|---|
| 12CC-L | G12 | XX | ZZ | DR | <A> | 1275 | |