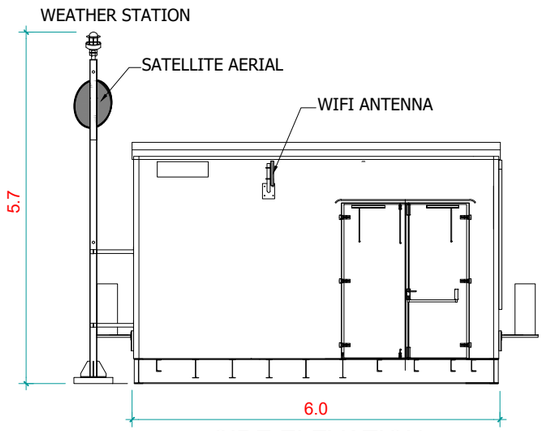

SIDE ELEVATION

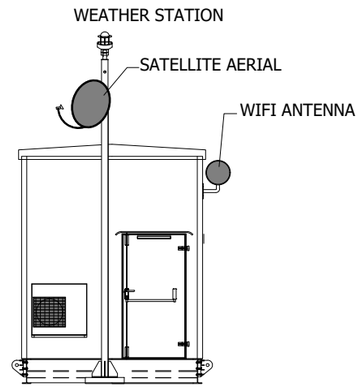

FRONT ELEVATION

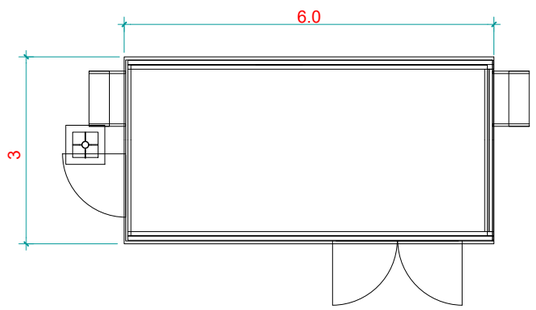

FLOOR PLAN

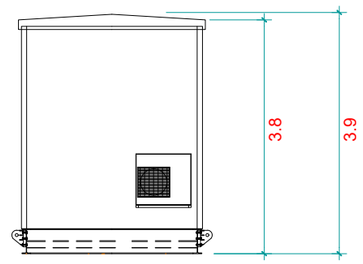

REAR ELEVATION

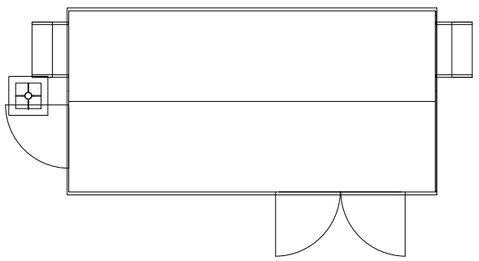

ROOF PLAN

0 2.5 5 Meters

GENERAL NOTES

1) ALL DIMENSIONS ARE IN METERS UNLESS SPECIFIED.

LEGEND

REFERENCE DRAWINGS

No.	DRAWING TITLE	DRAWING No.

R	DATE	DESCRIPTION OF REVISION	REMARKS

PROJECT NAME :

BURSTEAD
SOLAR PV AND BATTERY

OWNER'S ENGINEER :

GENERAL CONTRACTOR :

cero enso energy

THIS DRAWING IS PROPERTY OF CERO GENERATION AND MAY NOT BE COPIED (IN WHOLE OR IN PART) USED FOR MANUFACTURING OR DISCLOSED WITHOUT PRIOR CONSENT OF CERO GENERATION.

		SIGN	TITLE :
DRAWN BY	: GM		CONTROL ROOM ELEVATIONS
DATE	: 06-10-2021		
CHECKED BY	:		
DATE	:		
APPROVED BY	:		
DATE	:		

DRAWING No. : BU9.0

SHEET SIZE	SHEET	SCALE	REV
A3	1 OF 1	1:100	01