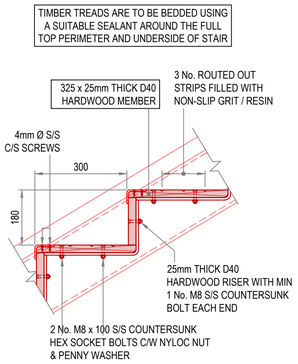

TYPICAL MAIN SPAN STAIR TREAD DETAIL

SCALE 1:10

ALL NOSING TO BE ALISPAR MOD7 NOSING OR SIMILAR APPROVED

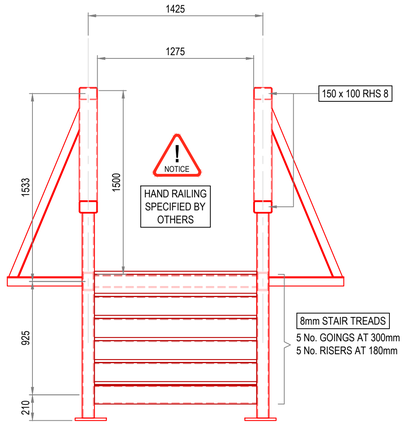

TYPICAL END SECTION

SCALE 1:25

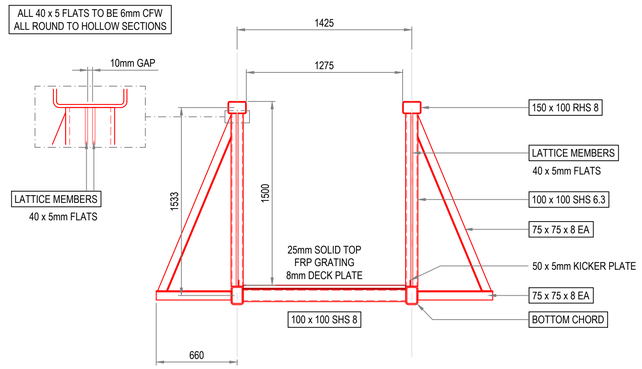

TYPICAL MID SPAN SECTION

SCALE 1:25

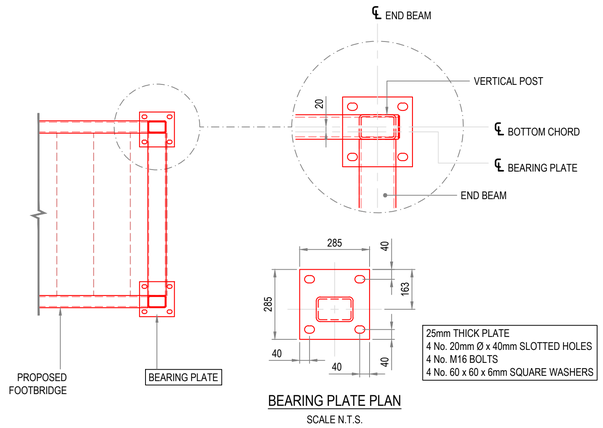

BEARING PLATE PLAN

SCALE N.T.S.

BEARING DETAIL PLAN

SCALE 1:25

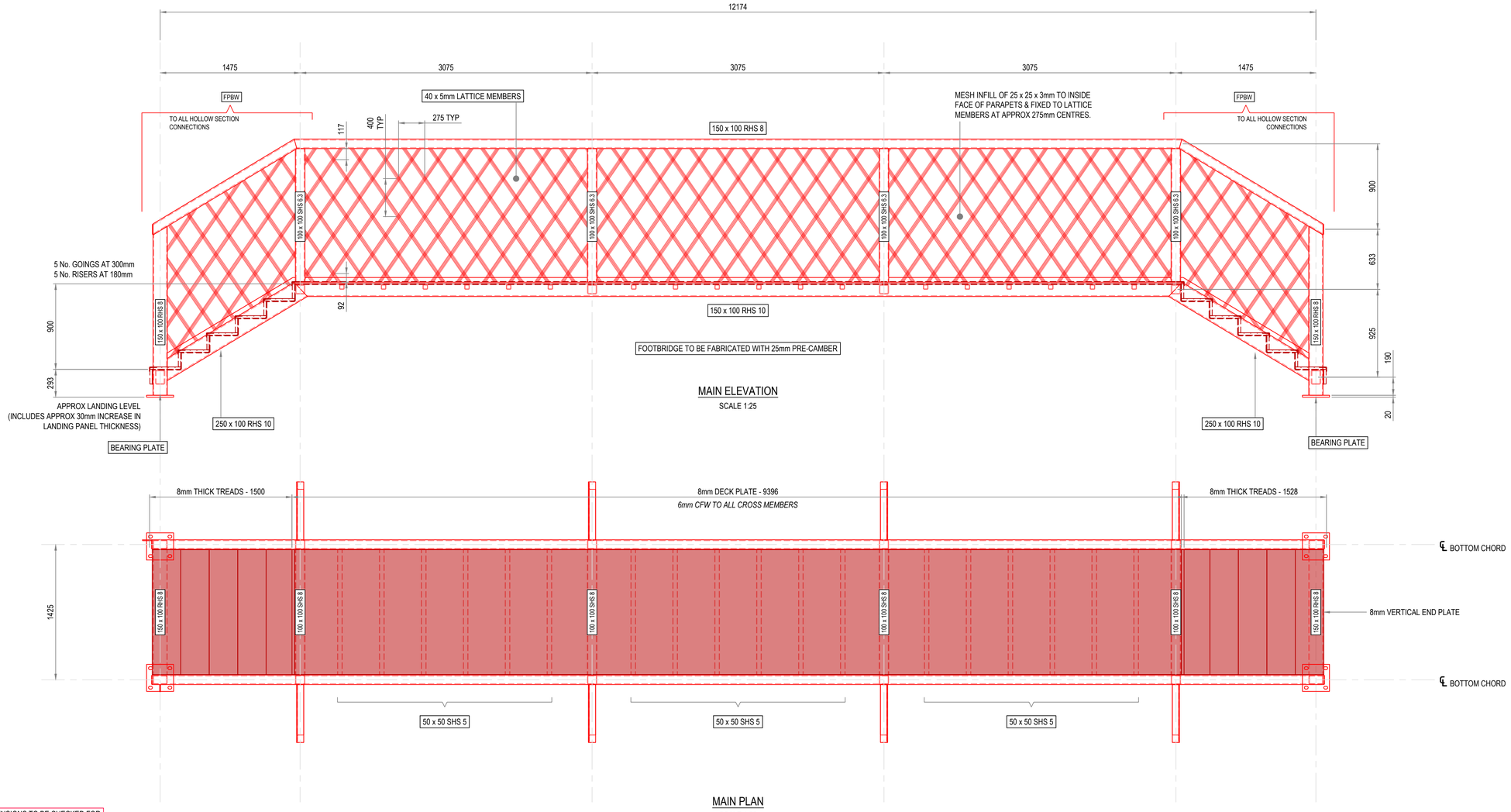

MAIN ELEVATION

SCALE 1:25

MAIN PLAN

SCALE 1:25

MAIN SPAN DIMENSIONS TO BE CHECKED FOR COMPARABILITY WITH EXISTING TRESTLE DIMENSIONS PRIOR TO FABRICATION.

20 0 20 40 60 80

100mm ON ORIGINAL DRAWING

DRAWING NOTES

1. THESE DRAWINGS TO BE READ IN CONJUNCTION WITH DRAWING 10755-001.

SAFETY HEALTH & ENVIRONMENTAL

RISK	SIGNIFICANT DESIGNER IDENTIFIED HAZARDS
REF	HAZARD
A	PROPOSED STRUCTURE DESIGNED IN ACCORDANCE WITH CURRENT STANDARDS AS FAR AS IS REASONABLY PRACTICABLE. APPROVAL AND RELEVANT DEROGATIONS TO BE SOUGHT AND APPROVED.
B	WORKING ADJACENT TO RAILWAY, WORK AT HEIGHT AND LIFTING OPERATIONS. WORKS ON OR NEAR THE LINE TO BE UNDERTAKEN IN ACCORDANCE WITH NETWORK RAIL WORK PROCEDURES.
C	DEMOLITION OF EXISTING STRUCTURE. CONTRACTOR TO DESIGN NECESSARY TEMPORARY WORKS AND DETERMINE SAFE DEMOLITION SEQUENCE & LIFTING PLAN FOR EXISTING STRUCTURE.
D	CONDITION OF EXISTING TRESTLES. ADDITIONAL STRENGTHENING/RENEWAL OF SUBSTRUCTURES TO BE IMPLEMENTED PRIOR TO INSTALLATION OF NEW MAIN SPAN.
E	CONDITION OF EXISTING FOUNDATIONS. ADDITIONAL STRENGTHENING/RENEWAL OF FOUNDATIONS TO BE IMPLEMENTED PRIOR TO INSTALLATION OF NEW MAIN SPAN.
F	EXISTING SERVICES. SERVICES TO BE IDENTIFIED, TRACED AND ISOLATED AND TEMPORARILY SUPPORTED PRIOR TO WORKS. SUITABLE PROTECTION MEASURES TO BE UNDERTAKEN BY CONTRACTOR PRIOR TO INSTALLATION.
G	EXISTING STAIRS AND LANDING PARAPETS TO BE TEMPORARILY SUPPORTED OR REMOVED DURING WORKS. SEE TEMPORARY WORKS SUBMISSION FOR DETAILS
H	RAIL IMPACT LOADS DUE TO STRUCTURE CLEARANCE. RESIDUAL RISK
I	LIFTING POINTS DESIGNED FOR VERTICAL LOADS ONLY. LIFTING BEAMS TO BE UTILISED TO ENSURE VERTICAL LOADING APPLIED TO LIFTING POINTS DURING LIFTING PROCEDURES

FORM B

REV	AMENDMENT	DRN	CHK	APP	DATE
C	FORM B (3) ISSUE	NR	BTB	BTB	22.02.23
B	FORM B (2) ISSUE	NR	SC	BTB	15.12.22
A	FORM B (1) ISSUE	NR	SC	BTB	18.03.22

CLIENT

DYER & BUTLER

PROJECT TITLE

BRADING STATION FOOTBRIDGE
ELR - IOW
STRUCTURE No. EW1/25
MILEAGE - 4m 1166yds

DRAWING TITLE

PROPOSED FOOTBRIDGE DETAILS

DRAWN	CHK	APP	DATE	SCALE
NR	SC	BTB	FEB 22	AS SHOWN AT A1

JOB NUMBER	DRAWING NUMBER	REVISION
10755	104	C