IDSystems
GLASS INNOVATIONS

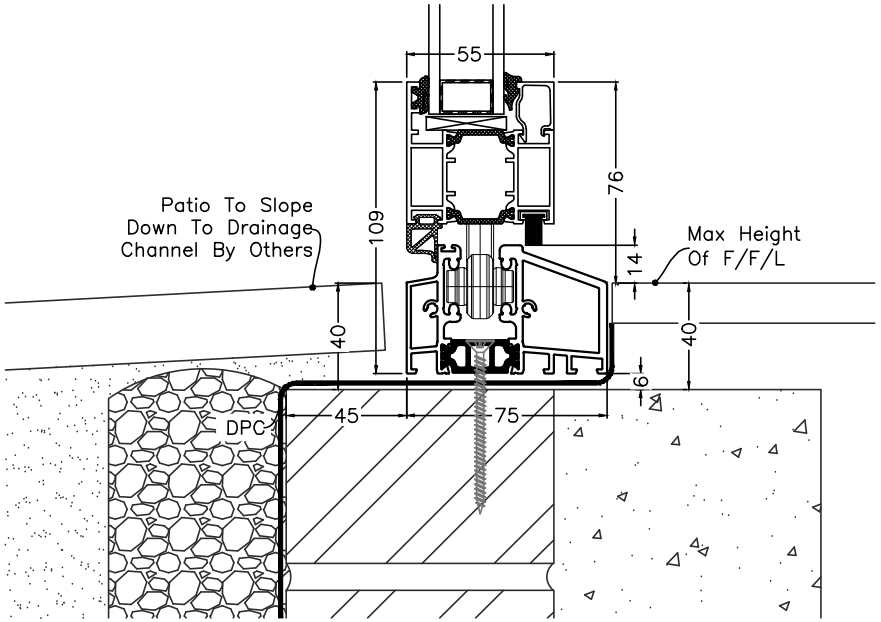

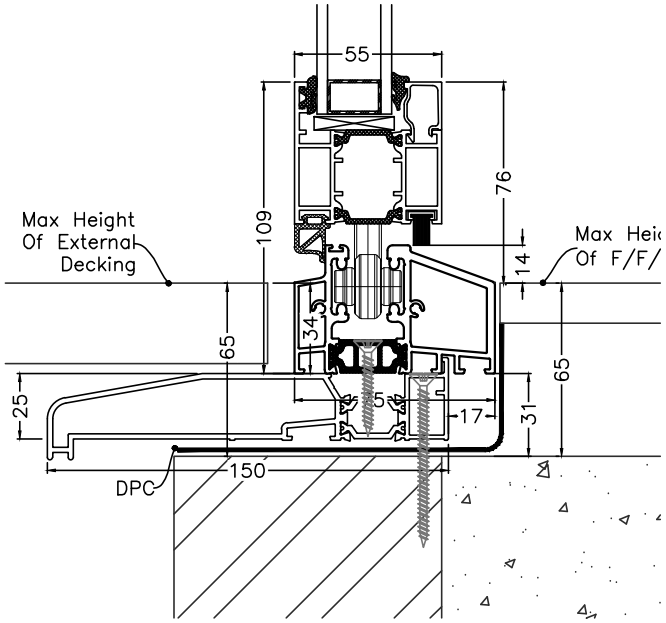

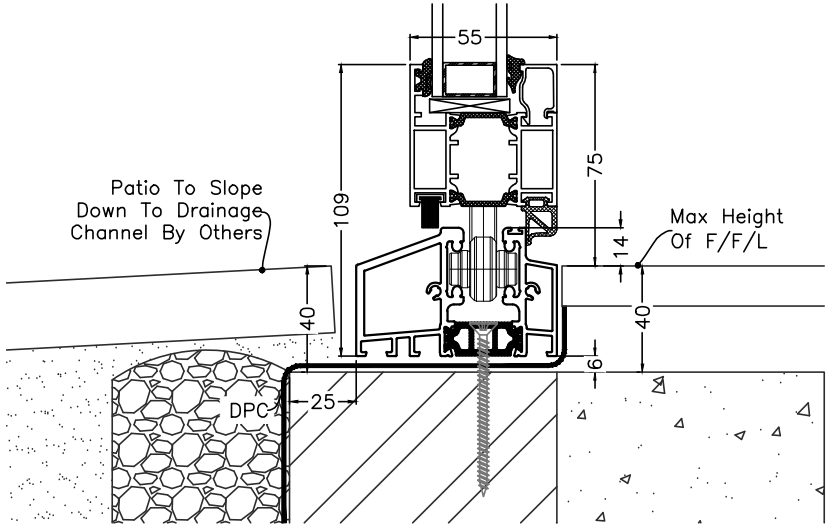

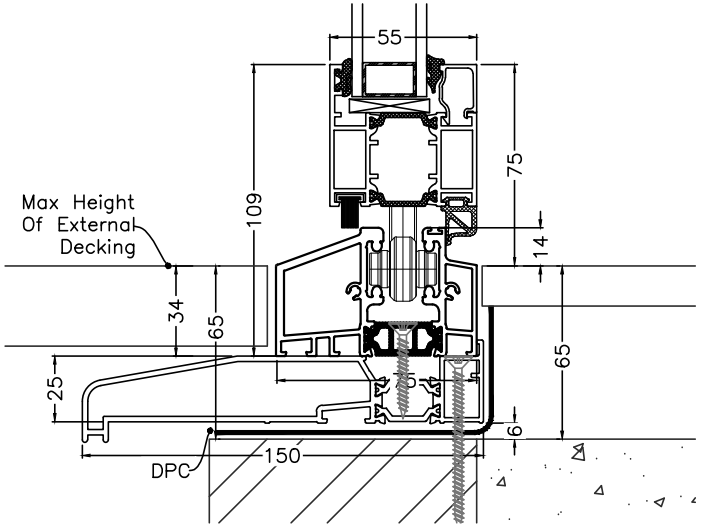

Description **Typical Threshold Details - Low Level Threshold**	Detail No: **SF55-C-02**
	System: **SF55** A