Heritage *(Illuminated)*
Projecting Sign

OmegaSigns®

Rev: C
23-10-23

Heritage *(Illuminated)*
Spec/Sizes

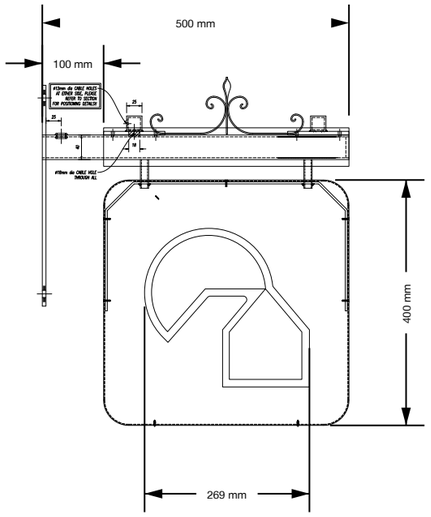

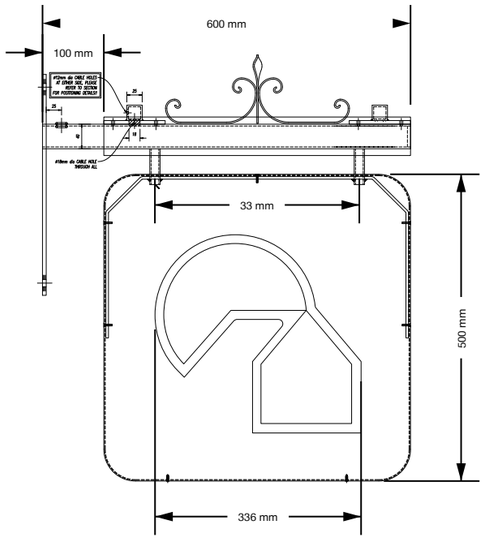

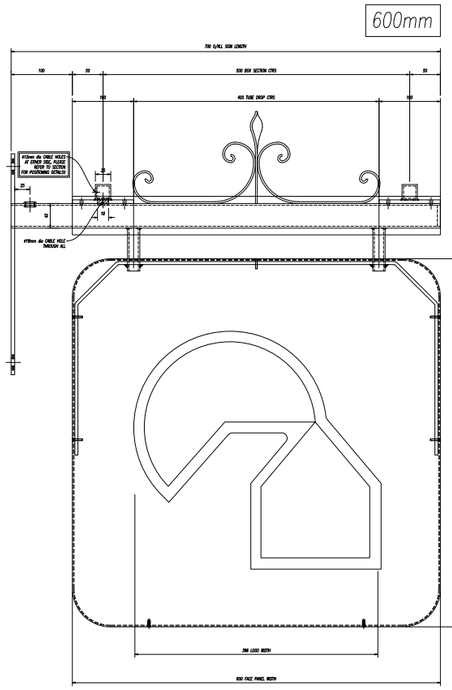

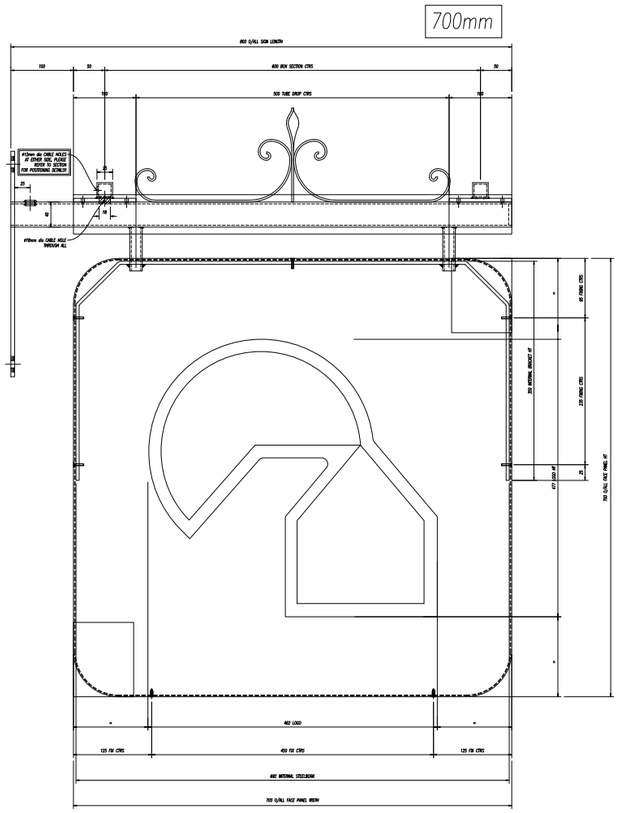

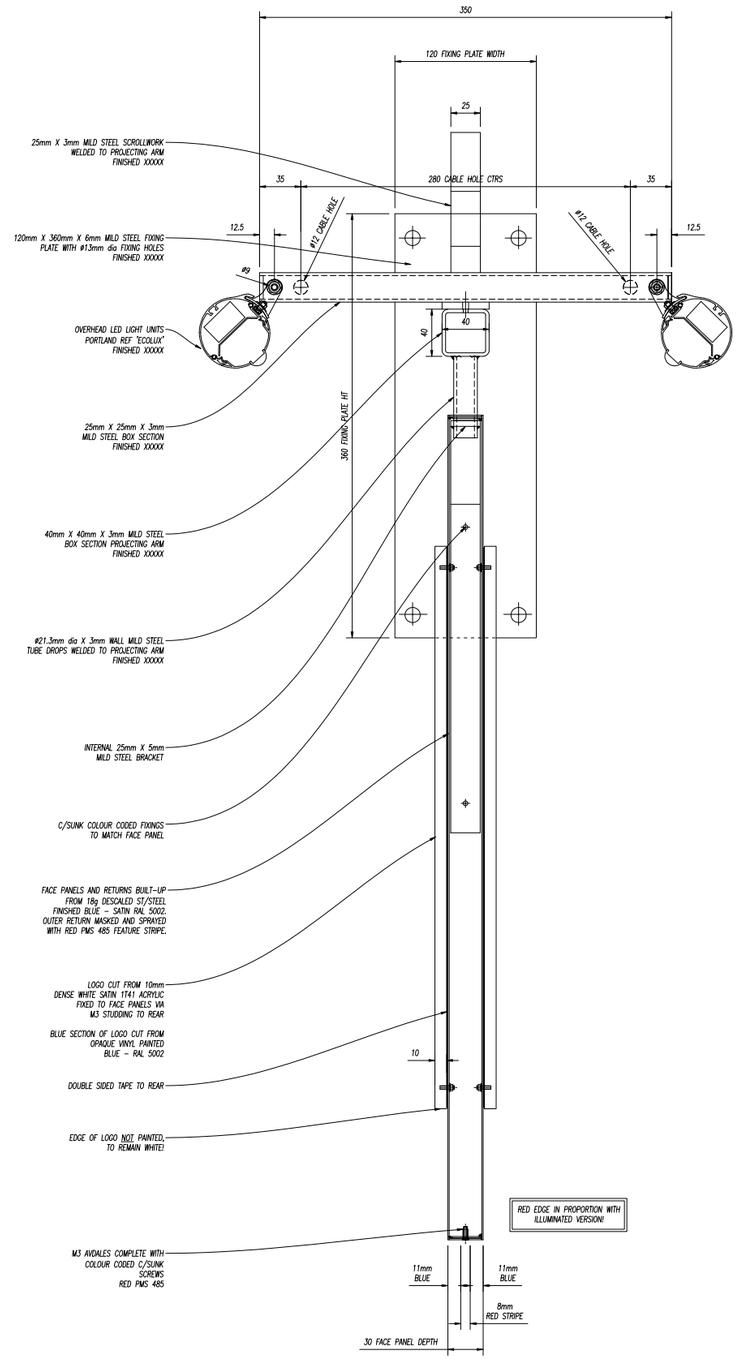

OmegaSigns®

Rev: C

23-10-23