GEOTEXTILE MEMBRANE STANK OPTION

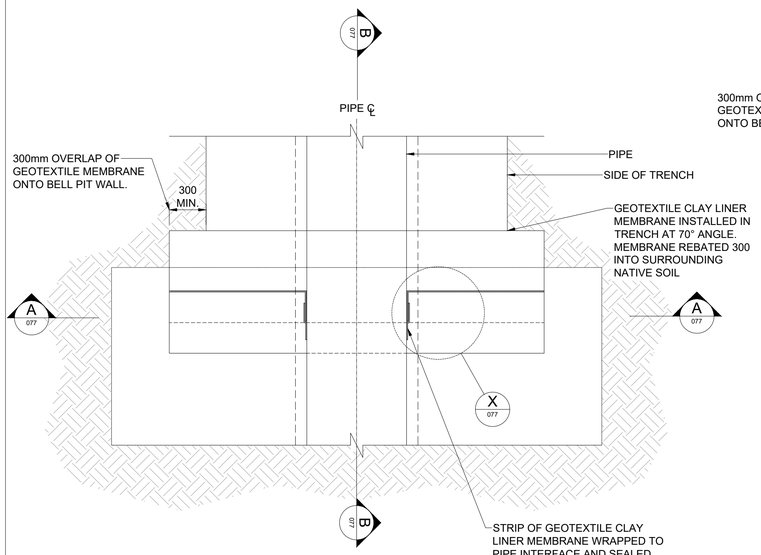

PLAN

SCALE 1:25

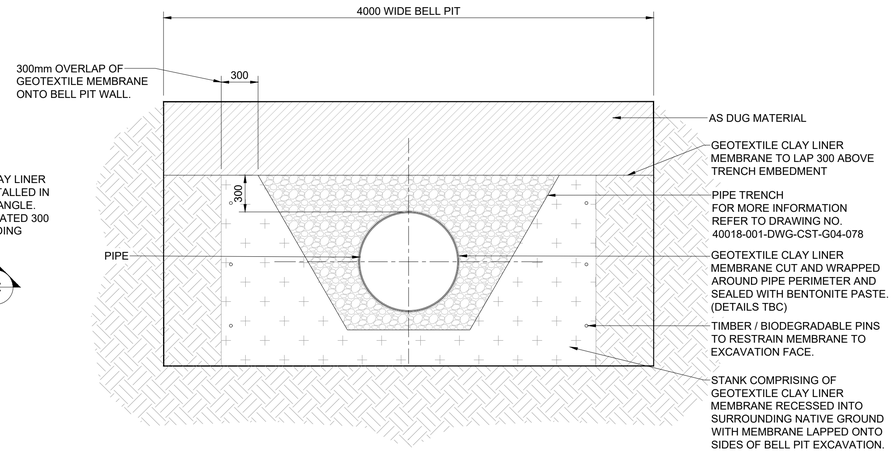

SECTION A-A

SCALE 1:25

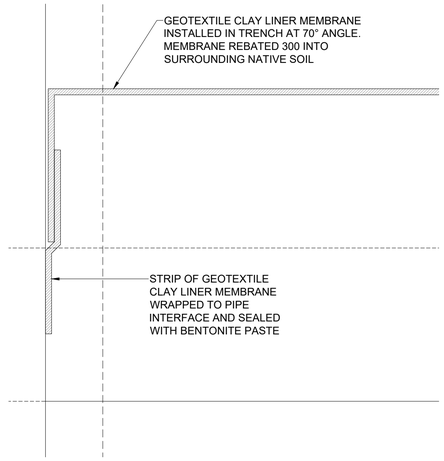

DETAIL X

SCALE 1:5

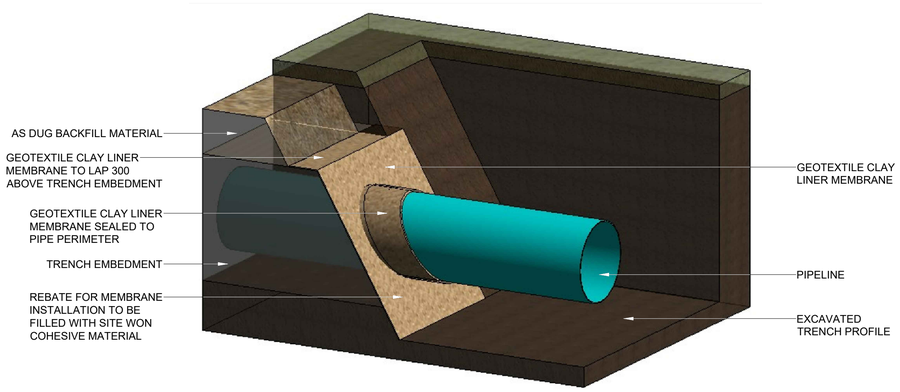

VISUALISATION

NTS

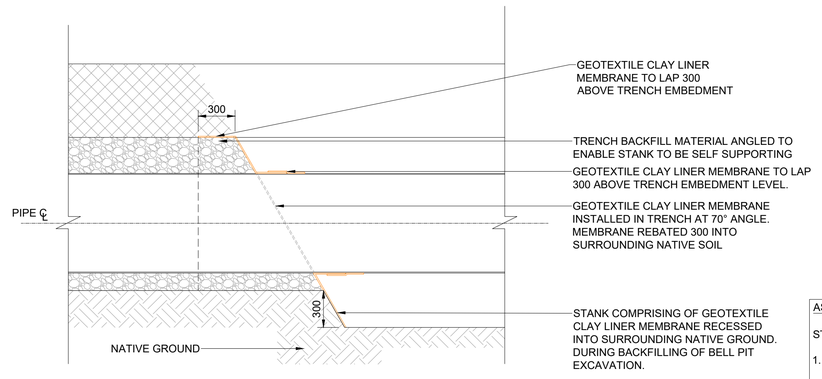

SECTION B-B

SCALE 1:25

AS-DUG CLAY ACCEPTANCE CRITERIA:

STANK MATERIAL:

1. A CLAY MATERIAL WILL BE SELECTED THAT PROVIDES COEFFICIENT OF PERMEABILITY OF 10^{-6}.
2. LAB BASED PERMEABILITY TESTS (E.G. PERMEABILITY TRIAXIAL TEST) ON REMOLDED SITE WON SAMPLES TO CONFIRM PERMEABILITY.
3. AN ANALYSIS OF THE MATERIALS PLASTICITY TO BE MADE TO ENSURE THAT THE MATERIAL IS COHESIVE IN NATURE AND IT HAS A SUITABLE PLASTICITY INDEX IN LINE WITH ATTERBERG LIMIT TEST AS PER BS1377.

AS-DUG CLAY STANK OPTION

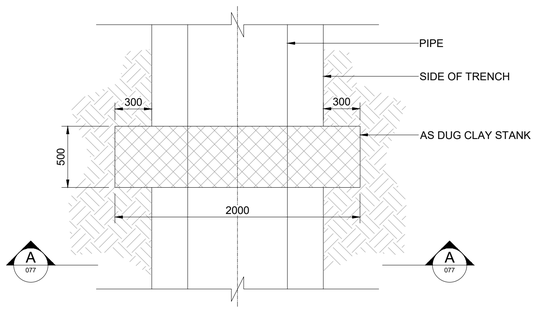

PLAN - REBATE STANK

SCALE 1:25

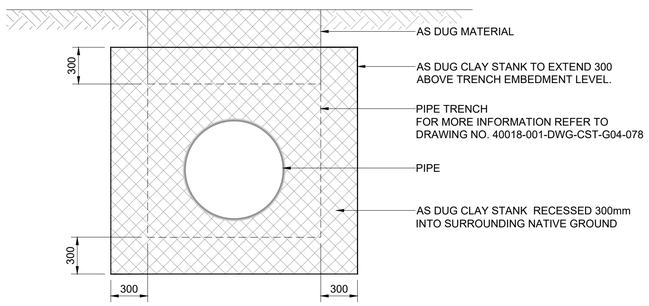

SECTION A-A

SCALE 1:25

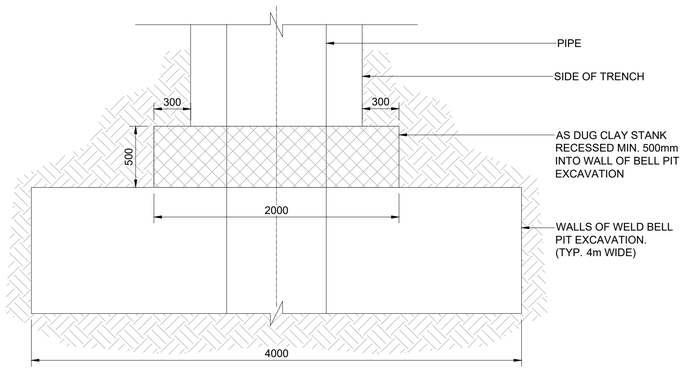

PLAN - RECESSED DETAIL

SCALE 1:25

0.1m 0m 0.1m 0.2m 0.3m
Scale 1:5

0.5m 0m 0.5m 1m
Scale 1:25

FARRANS A CRH COMPANY
ATKINS Member of the SNC-Lavalin Group

Atkins Limited
Chadwick House, Birchwood Park, Warrington, WA3 6AE
Direct: 01925 238319

NOTES:

1. ALL DIMENSIONS ARE IN MILLIMETRES UNLESS SHOWN OTHERWISE.
2. BATTERED TRENCH SAFE ANGLE TO SUIT GROUND AND GROUND WATER CONDITIONS.

STANK INSTALLATION LOCATIONS:

THE NEED FOR STANKS MUST BE ASSESSED ON A CASE BY CASE BASIS, TAKING INTO ACCOUNT THE LOCAL TOPOGRAPHY, PIPELINE TRENCH GRADIENT AND DISTANCE PLUS THE FOLLOWING:

1. WHERE SURROUNDING GROUND IS OF LOWER PERMEABILITY THAN THE PIPE BEDDING OR BACKFILL, STANKS SHALL BE INSTALLED AT THE FOLLOWING LOCATIONS IN ORDER TO PREVENT CONVEYANCE OF GROUNDWATER ALONG THE PIPE TRENCH:
   a. FIELD BOUNDARY
   b. LAND OWNERSHIP BOUNDARY INCLUDING NORTHUMBRIAN WATER SITES
   c. CHANGE IN GROUND CONDITIONS
   d. CHANGE IN PIPE BEDDING / SURROUND MATERIAL
   e. ON BOTH SIDES OF WATERCOURSES / DITCHES
   f. WHEN CROSSING THROUGH ANY LOCAL SPRINGS / GROUND WATER FLOWS RECORDED DURING PIPE LAYING.
2. STANKS TO BE PLACED AT ALTERNATE 'BELL PITS' C 50 – 56m APART OR AS AGREED WITH CLIENT REPRESENTATIVE ON SITE.

STANK MATERIALS AND DIMENSIONS:

STANK MAY BE MADE FROM THE FOLLOWING MATERIALS:

STANKS ARE TO BE CONSTRUCTED FROM GEOSYNTHETIC CLAY BARRIER REINFORCED COMPOSITES THAT COMBINE TWO DURABLE GEOTEXTILE OUTER LAYERS AND A UNIFORM CORE OF HIGH-SWELLING POWDER SODIUM BENTONITE CLAY SUCH AS BENTOFIX B4000 BY NAUE GEOSYNTHETICS OR SIMILAR APPROVED.

STANK MAY BE FORMED FROM AS DUG CLAY MATERIAL IN ACCORDANCE WITH CESWI ISSUE 7 CLAUSE 2.18. REFER TO THE NWG AS DUG CLAY ACCEPTANCE CRITERIA.

STANK DIMENSIONS ARE INDICATIVE AND TO BE REVIEWED ON SITE TO ENSURE EFFECTIVENESS AND CONSTRUCTABILITY OF STANK.

RISKS AND HAZARDS:

IF NATIVE GROUND IS NOT FREELY DRAINING OR THE FLOW INTERCEPTED IS LARGE ENOUGH, THEN A WET AREA COULD DEVELOP AROUND THE STANK CREATING BOGGY GROUND.

RISK CAN BE MITIGATED BY INSTALLING STANK AT REGULAR INTERVALS (ANALYSIS HAS BEEN CONDUCTED TO DETERMINE OPTIMUM STANK POSITION FOR VARYING GROUND CONDITION)

DRAWING REFERENCES:

40018-001-DWG-CST-G04-078: TYPICAL PIPE TRENCH DETAIL

Drawing Status: FOR REVIEW BY LEAD APPOINTED PARTY

Suitability: S4

Rev.	Description	Date	Drawn	Chk'd	App'd
P03	FOR REVIEW	22.11.2023	AJ	RH	SK
P02	FOR REVIEW	08.11.2023	AJ	RH	SK
P01	FOR REVIEW	27.09.2023	AJ	RH	SK

Note:-

IF THIS DRAWING IS FOUND TO BE IN ANY WAY INACCURATE, PLEASE ADVISE THE RECORD OFFICE IMMEDIATELY AND COMPLETE AN AMENDMENT FORM.

NORTHUMBRIAN WATER living water

CONTRACTOR: FARRANS
REF. NO.: WN019/0205-4.11
I.D. PROJECT NO.: WN019/0205

Drawing Title:

TEES STRATEGIC TRANSFER MAIN
PIPELINE STANK
TYPICAL DETAIL

Dwg No:
40018-001-DWG-CST-G04-077

Sheet:	Date:	Sheet:	Scale:	Rev No:
1 OF 1	22.11.2023	A1	AS SHOWN	P03

USER: JAN9320 Date: 2011/23 18:14:15 Filename: C:\Users\JAN9320\DC\ACCDocs\SNCL EDPM\52181b5-Tees Pipeline\Project Files\01-WIP\Civil Engineer\DR\40018-001-DWG-CST-G04-077.dwg