MATERIAL KEY

ALL IRONWORK TO BE PAINTED BLACK

- A — STONE PLINTH - EXISTING TO BE REUSED WITH NEW TO FOREST OF DEAN STONE TO MATCH
- B — SQUARE SECTION CAST IRON RAILING SET INTO PLINTH
- C — CAST IRON 4 POST BOX PIER TO MATCH RAILINGS
- D — 12mm FLAT BAR TOP RAIL
- E — CAST IRON ARROW HEAD FINIALS
- F — CAST IRON URN FINIALS
- G — CAST IRON STAY SUPPORT
- H — CAST IRON PEDESTRIAN GATE TO MATCH RAILINGS

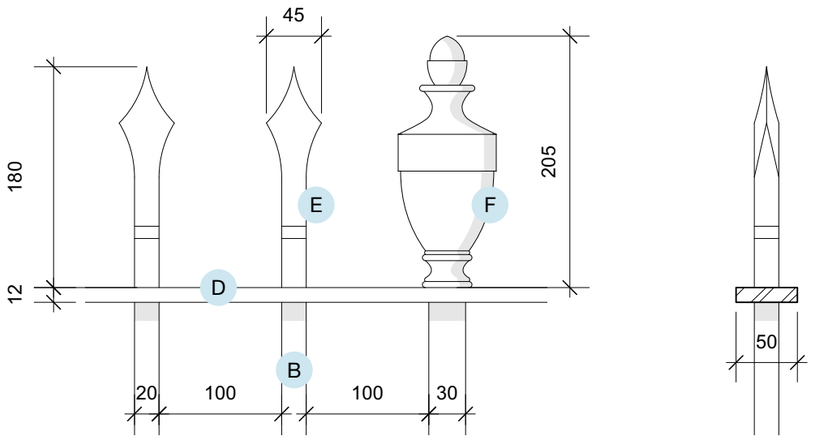

RAILING FINIAL DETAILS ELEVATION & SECTION

Scale: 1:5

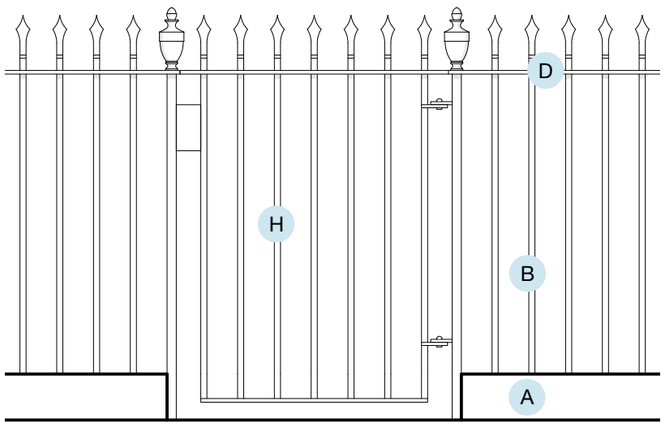

RAILINGS & PEDESTRIAN GATE ELEVATION

Scale: 1:20

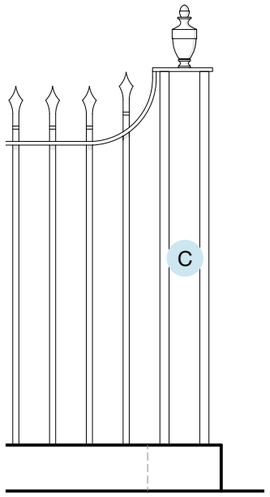

RAILING PIER ELEVATION

FOUR POST BOX PIER TO MATCH RAILINGS

Scale: 1:20

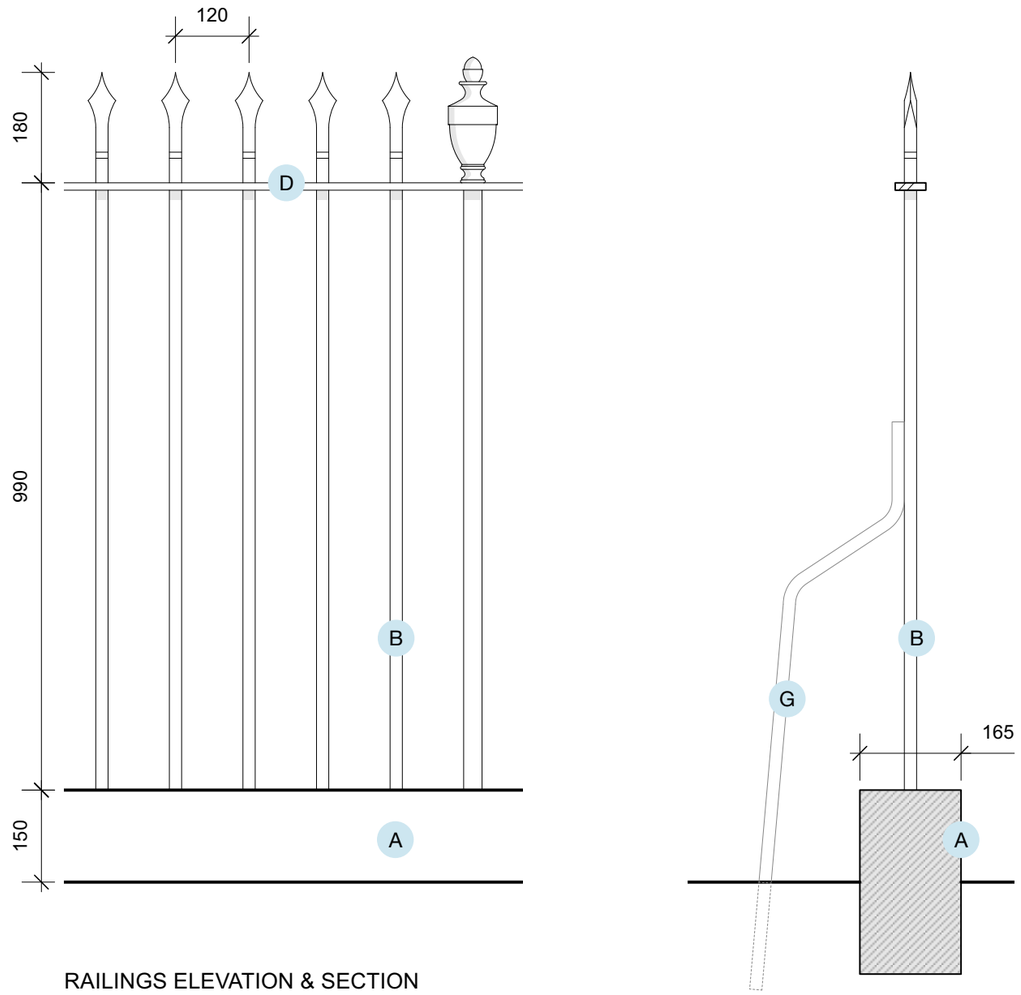

RAILINGS ELEVATION & SECTION

Scale: 1:10

Studio:
Edge Design Workshop Limited.
7 Royal Well Place,
Cheltenham GL50 3DN
01242 528 111
Plexal 14 East Bay Lane, Here East,
Queen Elizabeth Olympic Park,
London E20 3BS
020 7781 8177
mail@edgedesignworkshop.com
www.edgedesignworkshop.com

General Notes:
Copyright © EdgeDesignWorkshop Ltd. 2024.
EdgeDesignWorkshop is a limited company registered in England and Wales.
Registration number 4647312.
RIBA Chartered practice number 20022034.
This drawing is not to be reproduced, copied or given to a third party without express permission.
Do not scale drawings, dimensions govern.
All dimensions shall be verified on site before proceeding with the work.
All dimensions given in millimetres unless stated otherwise.
All drawings to be read in conjunction with other consultants drawings and specifications.
EdgeDesignWorkshop Ltd. are to be formally notified of any discrepencies.

Revision	Date	Drawn	Audited	Details of revision

Project **PARMOOR, 26 CAMBRAY PLACE** **CHELTNEHAM, GLOUCESTERSHIRE, GL50 1JN**	Project/Drawing/Revision No. **1625_330**	
Description **PROPOSED MIXED USE CONVERSION AND ASSOCIATED REFURBISHMENT WORKS**	RIBA Stage/Status **3**	Date **16/02/2024**
Drawing Title **PROPOSED RAILINGS, GATES AND PILLARS DETAILS**	Scale **1:5/10/20 @ A3**	Drawn/Audited **KS / JDP**

EDW

RIBA architects