aspect ecology

Old Brickyard Farm, North Winslow

Landscape and Ecological Management Plan (LEMP)

(to address the requirements of Condition 21 of planning permission ref: 19/03482/AOP)

May 2023

Quality Management	
Client:	Bloor Homes South Midlands
Project:	Old Brickyard Farm, North Winslow
Report Title:	Landscape and Ecological Management Plan (LEMP)
Project Number:	ECO 1021
File Reference:	1021 LEMP vf3 AS/DS
Date:	31/05/2023

Legal Guidance

The information set out within this report in no way constitutes a legal opinion on the relevant legislation. The opinion of a legal professional should be sought if further advice is required.

Liability

This report has been prepared for the exclusive use of the commissioning client and unless otherwise agreed in writing by Aspect Ecology no other party may use, or rely on the contents of the report. No liability is accepted by Aspect Ecology for any use of this report, other than for the purposes for which it was originally prepared and provided. No warranty, express or implied, is made as to the advice in this report. The content of this report is partly based on information provided by third parties; Aspect accepts no liability for any reliance placed on such information. This report is subject to the restrictions and limitations referenced in Aspect Ecology's standard Terms of Business.

Contact Details

Aspect Ecology Ltd
Hardwick Business Park | Noral Way | Banbury | Oxfordshire OX16 2AF
t 01295 279721 e info@aspect-ecology.com
w www.aspect-ecology.com

Contents

Text:

Plans:

Appendices:

1 Introduction

1.1 Background and Consented Planning Permission

1.1.1 Outline planning permission was granted by Buckinghamshire Country Council Aylesbury Vale Area in September 2019 for residential development of the site (up to 120 dwellings), associated infrastructure, ancillary facilities, open space and landscaping at land at Old Brickyard Farm, North Winslow (ref: 19/03482/AOP). The permission is subject to a number of conditions, of which Condition 21 is relevant to ecology and states:

Condition 21

"A landscape and ecological management plan (LEMP) shall be submitted to, and be approved in writing by, the local planning authority prior to the commencement of the development. The content of the LEMP shall include the following:

a) Description and evaluation of features to be managed.

b) Ecological trends and constraints on site that might influence management.

c) Aims and objectives of management

d) Appropriate management options for achieving aims and objectives

e) Prescriptions for management actions.

f) Preparation of a work schedule (including an annual work plan capable of being rolled forward over a five-year period).

g) Details of the body or organization responsible for implementation of the plan.

h) Ongoing monitoring and remedial measures.

The LEMP shall also identify the legal and funding mechanism(s) by which the long-term implementation of the plan will be secured by the developer with the management body(ies) responsible for its delivery. The plan shall also set out (where the results from monitoring show that conservation aims and objectives of the LEMP are not being met) how contingencies and/or remedial action will be identified, agreed and implemented so that the development still delivers the fully functioning biodiversity objectives of the originally approved scheme. The approved plan will be implemented in accordance with the approved details."

1.1.2 Accordingly, Aspect Ecology has been commissioned by Bloor Homes South Midlands to assist with satisfying Condition 21.

1.1.3 This LEMP is based on Aspect Ecology's Ecological Appraisal of the site, dated January 2021', hereafter referred to as the 2021 Ecological Appraisal. The LEMP should be read in conjunction with the Soft Landscape Plans produced by Bloor Homes (see Appendix 1021/LEMP1).

1.2 Site Description

1.2.1 The site is situated at the northern edge of Winslow, Buckinghamshire, to the north of a disused section of the Varsity railway line, which formerly linked Oxford and Cambridge. Network Rail is currently in the process of bringing this railway line back into use (as part of the East West Rail project) and are actively working on the section immediately to the south of the site. The site comprises species-poor semi-improved grassland bound by hedgerows and trees. In addition, a small area of secondary woodland, two ponds and tall ruderal are present. Within the north of the site are a number of agricultural type buildings with associated hardstanding and amenity planting.

1.3 Purpose of the Report

1.3.1 Aspect Ecology has been commissioned by Bloor Homes South Midlands to prepare a Landscape and Ecological Management Plan based on the latest landscape plans, to provide management and maintenance guidelines for the managing body and details of the faunal enhancements to be provided as part of the development scheme.

2 Description and Evaluation of Features to be Managed

2.1 Overview

2.1.1 Provided below is a summary of the ecological features currently on-site that are to be retained and managed, as well as ecological resources which will be created by the development, which require protection, mitigation and/or management as identified in the 2021 Ecological Appraisal.

2.2 Habitats to be Protected and Managed

- **Hedgerows** – the hedgerow delineating the western boundary of the site and the hedgerow immediately adjacent to the south are to be retained and constitute important ecological features.
- **Woodland** – an area of secondary woodland at the centre of the site forms an important ecological feature and is to be protected under the proposals.
- **Trees** – a number of young to mature native trees are to be retained and protected under the proposals largely associated with the hedgerows and woodland at the centre of the site.
- **Ponds** – the existing ponds at the centre of the site are to be retained, however they are to be reprofiled as part of the surface water drainage strategy and will therefore be subject to works.

2.3 Habitats and Features to be Created and Managed

- Species-rich Wildflower Grassland;
- Trees;
- Shrubs; and
- Attenuation basin.

2.4 New Faunal Features

2.4.1 As set out within the 2021 Ecological Appraisal, bat and bird boxes will be installed at the site as part of the development. In addition to this, a number of Hedgehog domes and Hedgehog cut-outs will be installed within the site to provide shelter/hibernation opportunities for Hedgehog and ensure connectivity is maintained for this species within the site. Hibernacula and log piles will be created within areas of new planting to provide shelter for amphibians and reptiles, as well as a foraging resource for a range of invertebrates. These features are described in Chapter 6 and will be subject to ongoing management.

3 Ecological Trends and Constraints On-site that may Influence Management

3.1 Climate change has the potential to affect the distribution of habitats and fauna within the UK and alter the timing of seasonal events. Hydrological changes will have a particular impact on aquatic ecosystems. There is therefore the potential for the newly created on-site wetland habitat to dry out more frequently during summer months as a result of climate change. However, as the existing ponds within the site regularly dry out throughout the year, the species present are likely adapted to withstand this ephemeral habitat. In addition, aquatic habitats will be at an increased risk of deoxygenation due to hotter and drier summers. However, the other retained habitats on-site (e.g. hedgerows and woodland) are likely to be relatively resilient to future climate changes.

3.2 Faunal species ranges may shift slightly due to climate change, however this is not expected to significantly influence the proposed management of habitats within the site. Increased winter temperatures may shorten the Great Crested Newt hibernation season and bring forward the breeding season, whilst decreased summer rainfall could lead to an increase in pond desiccation during the latter half of the breeding season. It is therefore difficult to predict how climate change might impact species such as Great Crested Newt which rely on standing water, however the provision of new waterbodies on-site as part of the scheme design will increase the opportunities available and therefore increase overall resilience to changes in precipitation. Increased temperatures and decreased rainfall in the summer months would also increase the likelihood of drought impacting grassland habitats within the site. As such, plant species tolerant to drought are to be included within the proposed planting plans. In addition, the provision of a mosaic of grassland and shrub habitat will increase the diversity of microclimates available on-site compared to existing, allowing for a corresponding increase in resilience of associated faunal species and an increased potential for the site to support additional species.

4 Aims and Objectives of Management

4.1 Landscape Aims and Objectives

4.1.1 The primary management aims from a landscape perspective are to ensure that the new and retained areas of soft landscaping provide an attractive setting for the development, integrating the development into the surrounding landscape, and provide useable amenity spaces for people from the development.

4.1.2 The above aims will essentially be achieved by the establishment and future sustained growth of native hedgerows, trees, wetland and grassland areas through appropriate management operations, as detailed below in Chapter 5 and the Landscape Specifications and Schedule at Appendix 1021/LEMP2.

4.2 Ecology Aims and Objectives

4.2.1 The primary aim from an ecological perspective is for management to ensure the retained and newly created habitats deliver the desired ecological enhancements for the benefit of local biodiversity, while making a positive contribution to national conservation priorities. This will be achieved through the following key objectives.

Objective 1:

4.2.2 Management of retained habitats (secondary woodland, hedgerows, trees and grassland) to promote vigour, structural integrity, and species diversity, thereby providing places of shelter, movement corridors, and foraging resources for wildlife.

Objective 2:

4.2.3 Establishment and subsequent management of new hedgerows, woodland, shrubs and ponds / wetlands in accordance with Objective 1.

Objective 3:

4.2.4 Establishment and subsequent management of new areas of wildflower grassland to promote floristic diversity and opportunities for wildlife.

Objective 4:

4.2.5 Provision and maintenance of new faunal species-specific features (e.g. bat and bird boxes, Hedgehog domes, log-piles for saproxylic organisms and additional newt and reptile habitat) to provide enduring places of shelter for wildlife.

5 Habitat-specific Creation and Management Actions

5.1.1 The development will provide a range of habitats to enhance the landscape setting and increase biodiversity for future generations. In order for the biodiversity and landscape benefits to be realised, an appropriate management strategy will be implemented. Ecologically relevant maintenance and management requirements are provided below.

5.2 Retained Woodland

Management

5.2.1 The woodland management shall be undertaken sensitively, guided by ecological principles which include minimising the use of herbicides / pesticides, etc., avoiding the use of heavy machinery which may cause soil compaction and ensuring that relevant works are undertaken outside of the nesting bird season (i.e. outside 1st March to 31st August inclusive).

5.2.2 Minimal sylvicultural intervention is likely to be necessary given the small size and nature of the retained woodland. However, annual inspections by a suitably qualified arboriculturalist will be carried out to provide a health-check on the canopy trees within the woodland. Should any trees require felling due to safety reasons or to prevent the spread of disease, for example, any timber arising shall be retained as habitat piles within the woodland. Over time, the woodland management will seek to continually build up the deadwood resource within the woodland by retention and stacking of arisings.

5.2.3 Every three years, a proportion (no more than a third in any 3-year period) of any overly dominant scrub growth (e.g. Bramble) will be thinned and any invasive species will be removed. Any litter within the woodland will also be removed.

5.3 Retained Hedgerows

Management

5.3.1 The retained hedgerows along the northern and western site boundaries will be trimmed on a rotational basis every two or three years in late winter so as to achieve the desired dense hedgerow structure and also to maximise fruit production of fruit-bearing shrub species. Hedgerow management will take place outside of the bird nesting season (i.e. outside 1st March to 31st August inclusive).

5.4 Retained Trees

Management

5.4.1 The existing retained trees will not typically require any active management. Nonetheless, an annual visual monitoring inspection of all trees within the site will be conducted as part of the on-going management operations. The visual inspection will identify the need for any proactive tree surgery measures and if necessary, a professional arboriculturalist will be consulted.

5.5 New Tree/Shrub Planting

Creation

5.5.1 New trees and shrubs are to be planted which will provide opportunities for wildlife, including invertebrates, birds, bats and small mammals. Planting a variety of trees/shrubs with varying flowering/fruiting periods will provide year-round foraging opportunities for a range of fauna, including invertebrates, birds (such as the Priority Species Starling *Sturnus vulgaris*), and small mammals. When mature, the trees and shrubs will also provide additional nesting opportunities for birds. Planting shall be carried out, where practicable, during the period of 1st November to 31st March inclusive, when the ground is not frozen or water logged.

Management

5.5.2 Initially, new trees/shrubs will be subject to weed control to promote their growth, through the application of mulch in early summer (April), the use of mulch mats around the base, or use of herbicides in a 1m diameter around the base. Tree guards or shelters will be used to protect new trees from potential grazing damage (e.g. Rabbits) and weed control and watering will be undertaken during the initial management phase to ensure rapid establishment. New planting growth will be monitored every six months during the first year following planting and annually thereafter, with weed control, watering, replacement of tree guards and replanting of failed specimens undertaken as required.

5.5.3 New trees/shrubs will generally only be subject to ongoing management on an 'as needed' basis. This may include pruning of tree/shrub species to enhance habitat structure and removal of non-native species. Newly planted areas in particular will not be subject to any substantial works in the short-term to allow establishment. Once established, tree guards will be removed and stakes provided if required. Ongoing management will ensure the planting does not encroach into adjacent habitats. No substantial works to woody vegetation (other than trimming of minor growth) will take place between 1st March to 31st August inclusive, in order to safeguard nesting birds.

5.6 Retained Grassland

5.6.1 Areas of grassland at the centre and the south-east of the site are to be retained and enhanced under the proposals, in addition several areas of wildflower grassland will be created under the proposals.

5.6.2 The retained wildflower grassland shall be protected during the construction phase and managed with the newly created areas of wildflower grassland as a traditional meadow in perpetuity of the scheme to benefit a range of fauna by providing cover and foraging opportunities (see Section 5.7.3).

5.7 New Wildflower Grassland

Creation

5.7.1 The scheme will include the creation of areas of wildflower grassland within green open space at the site. Prior to seeding, the topsoil will be cultivated to remove the existing vegetation, including any injurious weeds. Following cultivation, the area will be sown with a seed mixture which can grow on a variety of soil types such as Emorsgate Seeds –General Purpose Meadow Mixture (EM1) (see Appendix 1021/LEMP3).

5.7.2 This mixture contains a high diversity of herbs (a total of 24 species) with Crested Dog's-tail *Cynosurus cristatus* and Red Fescue *Festuca rubra* providing the dominant grass species. The mix also contains Yellow Rattle *Rhinanthus minor*, which will help to create a diverse mix of herbs to establish in the sward. The recommended sowing rate of this wildflower mixture is 4g/m^2. Prior to sowing, the seed mix should be combined with sawdust or barley meal in the ratio of 1:3. This will aid with a more even sow, especially as the seed mix contains seed of varying sizes, and also allows the areas already sown to be easily identified.

5.7.3 The wildflower seed shall be broadcast by hand or machine (e.g. fertiliser spreader) onto the soil surface. To achieve a good soil to seed contact, the seed will be lightly raked immediately after sowing. The seed shall be sown in late summer/early autumn (between August and September), which is when the majority of the sown species would naturally germinate, and those species that require a winter cooling period (vernalisation) to trigger germination are also favoured. If necessary, the seed could be sown in the spring, although the new seedlings will face greater competition from weeds and the germination of species requiring vernalisation will be delayed until the following year.

Management

5.7.4 Management of the wildflower grassland will be designed to encourage floristic diversity by regular cutting to control ranker grasses and weeds, whilst also controlling scrub encroachment and reducing nutrient levels. The cutting will also be timed to allow wildflowers to set seed.

5.7.5 **First Year Management.** The weed growth in the first spring following seeding is likely to be high. As such, it will be necessary to undertake regular mowing/cutting in the first year, between spring and autumn, to control weeds. This would involve cutting the sward each time it reaches 100-150mm in height, down to a height of 50-70mm. Arisings from the cutting will be removed from the grassland immediately. Regular pulling or spot treatment with herbicide may also be necessary.

5.7.6 **Ongoing Management.** Once established the wildflower grassland will be allowed to grow and flower to late July/August. The wildflower grassland will then be mown or strimmed to approximately 50mm. The arisings will be left *in situ* for one week (allowing the seed to shed), after which they will be collected and removed from the area.

5.7.7 After the main summer cut the grassland re-growth will be cut at least twice before November, with the aim of leaving the grass short through winter. The number of cuts should be determined by the fertility of the site, which will likely decrease over time. If any cuts produce significant quantities of arisings, these should be removed from the area.

5.7.8 A cut will also be undertaken in spring (to a height of 50mm) in the initial years of management when the soil is still likely to have a higher fertility. A spring cut will remove the first flush of grass and produce a shorter meadow in the summer. The need for a spring cut should be monitored and could cease after several years of on-going management.

5.7.9 **Weed Control.** The management practices detailed above should suppress perennial weeds such as Docks and Thistles in the long term. If, however, weeds become a problem within the wildflower grassland, these should be controlled by pulling. If necessary, spot spraying with a suitable herbicide could be undertaken. Indiscriminate herbicide spraying should not be undertaken.

5.8 Amenity Grassland/Flowering Lawn

Creation

5.8.1 New public amenity grassland areas will be created using a mixture such as Emorsgate EL1 'Flowering Lawn' which provides greater foraging opportunities to pollinating invertebrates than typical species-poor amenity lawns, whilst also being able to withstand regular mowing. Prior to seeding, the area will be cultivated to produce, as far as possible, a fine, firm tilth and left to allow any weeds in the soil to germinate. Any weeds or re-growth should be dug-up and removed by hand. This process should be repeated as necessary to produce a sterile seed bed free from injurious weeds. Prior to sowing, the seed mix should be combined with sawdust or barleymeal in the ratio of 1:3. This will aid with a more even sow, especially as the seed mix contains seed of varying sizes, and also allows the areas already sown to be easily identified. Sowing is most effective for EL1 'Flowering Lawn' seed mix in late summer / early autumn at a density of 4g/m^2 (40 kg per hectare) onto cultivated soil. The seed should be broadcast by hand or machine (e.g. fertiliser spreader) onto the soil surface.

Management

5.8.2 Management will be designed to allow the continued function of the amenity grassland areas for recreation. Herbicide use will be kept to a minimum but any undesirable weeds will be spot-treated with a broad-spectrum herbicide such as glyphosate. This process shall be repeated as necessary to keep the grassland free from injurious weeds. The amenity grassland will be managed by frequent mowing to the desired height throughout the growing season, which will involve mowing to a height of 50mm whenever the sward reaches a height of 100mm. Mowing will be relaxed in late June for 4 – 8 weeks to allow flowering.

5.9 SuDS

Creation

5.9.1 The two central on-site ponds are to be enlarged and incorporated within a new, larger SuDS feature. Additionally, a new SuDS feature is to be created at the north-east of the site. The new SuDS features will have sinuous margins, over deepened areas to provide permanently wet features and marginal plant species will be provided to increase the biodiversity value of the SuDS in the short term. The margins will be sown with a seed mixture suited to wet soils such as Emorsgate Seeds – Pond Edge Mix (EP1) (see Appendix 1021/LEMP4 for specifications) which include species such as Meadowsweet *Filipendula ulmaria*, Yellow Iris *Iris pseudacorus* and Purple Loosestrife *Lythrum salicaria.* The SuDS will also provide inundation habitat in periods of high rainfall providing additional habitat at the site, thereby providing additional biodiversity benefits. This new habitat will provide opportunities for a range of amphibian and invertebrate species, along with foraging habitat and water supply for mammals and birds.

5.9.2 The new SuDS will be located in publicly accessible areas and measures will therefore be taken to minimise the potential for negative impacts arising (such as disturbance by dogs or the introduction of fish or non-native plants). These include the provision of planting on areas of the banks to deter access but sited to avoid over shading of the pond surface.

Management

5.9.3 All the proposed SuDS will be subject to general ongoing management carried out in response to the conditions at the time. General activities will include, as appropriate:

- Removal of litter and large items of debris;
- Clearing/maintenance of any inlet structures, headwalls, etc.;
- Containment and investigation of any pollution incidents;
- Monitoring levels of human disturbance (for example public disturbance around new and existing ponds) and taking remedial actions as necessary (such as erection of fencing or signage);
- Selective removal of surrounding vegetation around the ponds, for example to reduce effects of overhanging scrub dropping leaf litter into the water or causing excessive shading;
- Management of marginal vegetation around the ponds by cutting once every two years on rotation; and
- Monitoring of water conditions such as algal blooms.

5.9.4 The grassland margins of the SuDS will be managed as per the wildflower grassland tussocky areas as detailed above.

5.9.5 Over time, it may be necessary to selectively thin the habitat to ensure no species becomes dominant. Any rubbish and or non-native / invasive plants will be removed by hand and disposed of appropriately.

5.10 Habitat / Landscape Creation Timeframe

5.10.1 All habitats shall be created to a finished standard after completion of the build phase.

6 Fauna-specific Creation, Management Actions and Installation Time frame

6.1 Bats

Creation

6.1.1 To enhance the site's bat roosting opportunities, six bat tubes (Schwegler 1FR or similar) will be installed on a proportion of the new build (see Appendix 1021/LEMP5 for specifications). In addition, ten bat boxes (six Beaumaris Woodstone and four NHBS General Purpose Box) will be installed on suitable retained trees and a pole at the south-east of the site. The bat boxes will be installed in a sunny location, facing either a south-easterly or south-westerly direction, at a height of 3-5m (see Plan 1021/LEMP1 for locations and elevations). Bat boxes will be positioned away from any lighting fixtures so as to not disrupt the potential use of the boxes and should not be located directly above any windows and/or doorways. In addition, care shall be taken to ensure the boxes are not obscured by vegetation.

Management

6.1.2 Integrated bat boxes and woodcrete boxes are rot proof, extremely long lasting and require no specific maintenance or monitoring. Nonetheless, an annual inspection of bat boxes attached to trees will be undertaken to ensure boxes remain secured. These inspections can be conducted at any time of year; however, any adjustments to the bat boxes (e.g. repositioning) shall be undertaken by a suitably qualified ecologist in spring or autumn months when bats are less likely to be significantly disturbed.

6.2 Birds

Creation

6.2.1 To increase nesting opportunities for birds within the site, ten boxes comprising five Manthorpe Swift Bricks and five Habibat Sparrow Terrace boxes (or similar will be installed on suitable new buildings within the site (see Appendix 1021/LEMP6 for bird box specifications).

6.2.2 The bird boxes will be installed facing a north-westerly or north-easterly direction (see Plan 1021/LEMP1 for locations). The integrated bricks shall be installed at a minimum height of 3m so that they are not subject to predation by opportunistic cats or liable to vandalism. Where affixed to new buildings bird boxes shall not be located directly above any windows and/or doorways and care shall be taken to ensure the boxes are not obscured by vegetation.

Management

6.2.3 The bird boxes are rot proof and extremely long-lasting and should not require ongoing maintenance. However, a visual monitoring inspection will be undertaken annually from the ground by the Management Agency to ensure bird boxes located within areas of public open space remain intact and identify the need to repair or replace any boxes. Any works to bird boxes shall be undertaken in the autumn/winter months (i.e. outside 31st March to 1st August).

6.3 Hedgehog

Creation

6.3.1 A total of three Hedgehog nesting domes (see Appendix 1021/LEMP7 for specifications) will be installed in suitable locations in the centre and south-east of the site to provide new opportunities for nesting and hibernating Hedgehog (a Priority Species). Hedgehog domes shall be positioned in discrete locations in areas of dense vegetation, outside of direct sunlight and away from any major roads (see Plan 1021/LEMP1 for locations). In addition, to maintain connectivity throughout the site for Hedgehog and to allow access to suitable foraging habitat contained within residential gardens, small holes (minimum 13cmx13cm) shall be created within garden fences or under gates.

Management

6.3.2 Hedgehog domes are extremely long lasting and require no specific maintenance. An annual monitoring inspection will be undertaken however to identify the need to repair or replace any Hedgehog nest domes, as necessary.

6.4 Reptiles and Amphibians

Creation

6.4.1 The new wildflower grassland, native shrub planting and SuDS ponds will provide enhanced habitat for reptiles and amphibians on-site. In addition, two hibernacula and two log piles will be installed within the wildflower grassland and retained woodland to provide additional refuge opportunities for reptiles and amphibians (see Appendix 1021/LEMP8 for specifications).

Management

6.4.2 Hibernacula and log piles are long lasting in nature and their gradual decay is important to ensure they continue to provide benefits to a range of faunal species. As such, they should not require ongoing maintenance. Nonetheless, arisings from ongoing management within the site can be used to restock these, as needed.

6.5 Invertebrates

Creation

6.5.1 A total of four invertebrate boxes will be erected onto retained trees within the site (see Plan 1021/LEMP1 for locations). Invertebrate boxes will provide additional opportunities for nesting and hibernating insects, including solitary bees and ladybirds (see Appendix 1021/LEMP9 for example specifications). So as to maximise their potential use invertebrate boxes shall be positioned in sheltered, wind free areas, where they are exposed to the sun for part of the day, facing either a southerly, south-easterly or south-westerly direction. The invertebrate boxes shall be unobstructed by vegetation, though within close vicinity of nectar and pollen sources.

6.5.2 In addition, two partially buried log piles will be created from cut material extracted from recent scrub clearance on-site (see Appendix 1021/LEMP10 for specifications). The provision of deadwood habitat will provide additional suitable habitat for saproxylic invertebrates.

Management

6.5.3 Invertebrate boxes are extremely long lasting and require no specific maintenance. Buried log piles are long lasting in nature and their gradual decay is important to ensure they continue provide benefits to a range of faunal species. As such, they should not require ongoing maintenance. Nonetheless, arisings from ongoing management within the site can be used to restock these, as needed.

6.6 Fauna-specific Habitat Installation Timeframe

6.6.1 All bat and bird boxes will be installed on trees within a 12-month timeframe following commencement of construction. The bat and bird boxes incorporated with in the new build and the Hedgehog cut outs in garden fences will be installed at an appropriate point during the construction. The remaining measures for amphibians, reptiles, Hedgehog and invertebrates will be installed within a 12 months of construction commencement.

6.7 General Maintenance

6.7.1 All landscape maintenance operations, where they do not conflict with ecological operations, will be conducted in accordance with BS 4428:1989 'Code of practice for general landscape operations' (excluding hard surfaces). Ongoing landscape maintenance operations are to be in accordance with sound ecological principles, and where relevant in accordance with BS 7370-4:1993 'Grounds Maintenance Recommendations for maintenance of soft landscape' (excluding the amenity grassland).

6.7.2 Upon practical completion of each landscape area, Bloor Homes South Midlands will hand over to an appointed management agency who will remain responsible for the general maintenance of all landscaped areas during the aftercare period. The aftercare period shall cover the defects liability period for which Bloor Homes South Midlands remains liable for any failures and necessary replanting.

6.7.3 The management agency shall eradicate weed growth of planted areas either by manual, mechanical or chemical means. Perennial weeds may be treated with glyphosate or other similar approved product. The management agency will apply the herbicide in strict accordance with the relevant best practice guidance (e.g. DEFRA – Pesticides: Code of practice for using plant protection products 2006), during suitable weather conditions. All relevant Acts of Parliament and the manufacturer's instructions must be followed and containers and other contaminated equipment must be cleared from the site after each day's work.

6.7.4 During routine maintenance visits, the management agency shall:

- Check all plants for damage, security, firmness, fixing and support, and replant in an upright position and re-firm if required;
- Keep all planting areas free from weed growth and hoe over and level all cultivated areas and remove weeds to tip, reinstating mulch as necessary;
- Remove encroaching scrub growth from wildflower grassland areas;
- Re-fix displaced, ease where necessary, or replace where damaged, tree ties and tree and shrub shelters; and
- Remove any litter or surplus discarded materials from the above within planted areas.

6.7.5 At the end of each growing season, an inspection of all planting areas shall be carried out by the management agency to identify plants that have died or are failing to thrive or, in the opinion of the management agency are likely to die or fail to thrive. The management agency is responsible for the health and establishment of all plants, and therefore should ensure the appropriate amount of fertiliser is applied, and if necessary, carry out a scientific soil survey to ascertain the level of nutrients. Any dead plants shall be removed from the site; replacement plant material shall be of the same size and species as specified in the contract.

6.7.6 Replacement planting shall be carried out by the management agency in the planting season following the discovery of the defect.

6.7.7 The areas of wildflower grassland will require careful management to promote and maintain their ecological value. The management agency shall be responsible for the cutting regime noted within this Document.

6.7.8 Watering shall be carried out to field capacity during periods of drought during the aftercare period.

6.7.9 Any waste created as part of the general or habitat specific landscape management operations will either be incorporated into log piles within the site, disposed of appropriately off-site or composted on-site. The disposal of waste will be conducted as appropriately decided by the management agency at the time of works.

7 Management and Monitoring

7.1 Responsibilities and Funding

7.1.1 Bloor Homes South Midlands will be responsible for the implementation of the initial habitat creation and maintenance. Following completion, Bloor Homes South Midlands will hand over the management of the site to an appointed management agency, who will implement the ongoing management prescriptions during the operational phase.

7.1.2 The management prescriptions detailed within this report will be implemented during the first 10 years following completion of the development. Thereafter the management will be reviewed by the landscape contractor or management company and adjusted as necessary.

7.1.3 The management agency will be financed through an annual service charge paid by the residents of the new development.

7.2 Monitoring

7.2.1 Long-term monitoring of the newly established habitats will be undertaken following establishment, to evaluate progress and to ensure appropriate management is being implemented at the site. Regular / routine monitoring of these areas will be undertaken by the contractor, to ensure the habitats are developing as expected. Where further mowing of the wildflower grassland is required (if competitive grasses become dominant) this shall be addressed as appropriate.

Plan 1021/LEMP1:

Landscaping and Faunal Enhancements

Key:

- Site Boundary
- Biodiversity Enhancement Land
- Beaumaris Woodstone Bat Box Installed on Tree
- NHBS General Purpose Bat Box Installed on Tree
- Schwegler 1FR integrated Bat tube (or similar)
- Bat Box on Pole
- Manthorpe Swift Bricks
- Habibat Sparrow Terrace Box
- Hedgehog Nest Box
- Hibernacula
- Log Pile
- Invertebrate Boxes on Retained Trees
- Partially Buried Log Pile

aspect ecology

Aspect Ecology Limited - West Court - Hardwick Business Park
Noral Way - Banbury - Oxfordshire - OX16 2AF
01295 279721 - info@aspect-ecology.com - www.aspect-ecology.com

Brick Kiln Farm, Winslow	PROJECT
Faunal Enhancements	TITLE
1021/LEMP1	DRAWING NO.
B/JP	REV
February 2023	DATE

P:\Project\Aspect Ecology Projects\ECO 1000\ECO 1021\1021 05 Bloor\Graphics\QGIS v3 2023 Proposals\1021 HMP1.qgz

Appendix 1021/LEMP1:

Soft Landscaping Proposals

THIS DRAWING IS TO BE READ IN CONJUNCTION WITH SEPERATE GROUP / SITE SPECIFIC CONSTRUCTION NOTES AND MATERIALS SPECIFICATION.

LEGEND

- EXISTING TREES/HEDGES
  To be retained
- PROPOSED TREES
  Extra Heavy Standard
  See Schedule
- TREE PITS WITH ROOT CELLS
  ** Trees that require Strata Root Cells*
  See Tree Detail
  -- Location of Strata Cells
- ORNAMENTAL HEDGE
  See Schedule
- NATIVE HEDGE
  See Schedule
- PROPOSED PLANTING
  Shrubs/Herbaceous/Grasses
  See Schedule
- AMENITY GRASS
  Turf to Plots
  Wear Tolerant Turfgrass to LEAP
  Emorsgate EG22 sown at 25g/m²
  Kept mown short to 40mm
- FLOWERING LAWN
  Flowering Lawn Mixture
  Emorsgate EL1 sown at 4g/m²
  Kept mown short to 40mm
- RETAINED SI/MSR GRASS
  Existing grassland to be retained
- SEASONAL WETLANDS
  Meadow Mixture for Seasonally Wet soils
  Emorsgate EM8 sown at 4 g/m²
- NATIVE SCRUB MIX
  See Schedule
- SENSORY PLANTING
  Specimens/Sensory Mix
  See Schedule
- MARGINAL MIX
  See Schedule
- BULB PLANTING
  See Schedule
  Bulbs scattered by hand and planted where they fail to create a natural look.
- GRAVEL PATH
  Regional Specification
- ● Dog Bin
  FURNITURE
  As Supplied by Broxap Ltd
  x2 Sirius Dog Waste Bin
  Ref: BX45G 2591-PM
  Or similar approved

Revision		Date
a	Landscaping updated to the latest layout (U) and following landscape comments.	19/01/23
b	Landscaping updated to the latest layout (V).	23/02/23
c	Path added to south of layout.	28/02/23
d	Landscaping updated to the latest layout (W).	07/03/23

Job. Winslow - Old Brickyard Farm

Title. Site Landscaping Overall Plan

Scale.	1:500 @A0	Drawn.	LP
Date.	Dec 2021	Checked.	PmJ

BLOOR HOMES
J S BLOOR (SERVICES) LIMITED
ASHBY ROAD, MEASHAM, SWADLINCOTE, DERBYSHIRE DE12 7JP
TELEPHONE 01530 270100 FACSIMILE 01530 272006

Drawing No. SM5145-LS-004d

WINSLOW - OLD BRICKYARD FARM

Appendix 1021/LEMP2:

Site Landscaping Specification and Schedule

Scale Bar
1:500
0 2 4 6 8 10 20 m

Winslow - Old Brickyard Farm

Accommodation Schedule

Accommodation Schedule

Old Brickyard Farm, Win Based On: SM5145-SL-001L 20 April 2022

Private 65.0%

Type	Beds	Storeys	No	Size	Total sqft
Dyer	2	2	9	847	7623
Dyer MT	2	2	1	847	847
Ludlow SD	2	2	1	847	847
Lutterworth	3	2	9	940	8460
Keswick	3	2	14	868	12152
Lytham	3	2	4	1410	5640
Matlock	3	2.5	6	1050	6300
Hutton	3	2	6	1113	6678
Wodehouse	3	2	3	1311	3933
Warwick	4	2	8	1311	10488
Horsham	4	2	8	1498	11984
Dorchester	4	2	4	1639	6556
Ripley	5	2	5	1750	8750
			78		90258

Rent 26.7%

Type	Beds	Storeys	No	Size	Total sqft
M42-2B4P Sedley	2	2	8	798	6384
M42-3B5P Southey	3	2	9	945	8505
M42-4B6P Saffery	4	2	2	1085	2170
M43-1BF01 Sahlberg GF	1	2	3	625	1875
1BF01 Sahlberg FF	1	2	3	733	2199
M43-2BF Tunstall GF	2	2	3	677	2031
2BF Tunstall FF	2	2	3	788	2364
B80024 Spurgon	3	2	1	945	945
			32		26473

Shared 8.3%

Type	Beds	Storeys	No	Size	Total sqft
M42-2B4P Sedley	2	2	5	798	3990
M42-3B5P Southey	3	2	4	945	3780
B80024 Spurgon	3	2	1	945	945
			10		8715

Total 120 125446

Gross Site Area	0.000	acres
Net Site Area	8.089	acres
Density	14.83	dwellings/acre
Coverage - Overall	15508	sqft/acre
Coverage - Private	15038	sqft/acre
Coverage - Social	16861	sqft/acre

Key:

- Foul Pump Station
- Sub Station
- ● Affordable Rent
- ● Affordable Shared Ownership
- Visitor Parking
- Motor Cycle Parking
- BCP Bin Collection Point 240ltr bins
- Proposed Trees
- Existing Trees
- ▨ Biodiversity Enhancement Land
- Existing Gas Easement
- CB Custom Build Plots
- * Indicative Surveillance window location
- * Additional detailing to match front of property

N.B. PV panels to south facing roofs where applicable.

Revision.

R	Updated in accordance with Urban Designers comments (19/10/2022)	21.10.22	HB
S	Updated in accordance with Urban Designers comments (23/11/2022)	24.11.22	HB
T	Accommodation schedule corrected	05.12.22	HB
U	Updated in accordance with Urban Designers comments (13/01/2023)	18.01.23	HB
V	Updated in accordance with Urban Designers comments (22/02/2023)	27.02.23	HB
W	Updated in accordance with Urban Designers comments (03/03/2023)	06.03.23	HB
X	Housetype blocks amended to match planning drawings, canopies to previous bays removed. Plots 31, 32, 39, 56, 74, 75, 76, 82, 83, 85, 99 updated.	10.03.23	EH
Y	Amended following consultation responses	30.03.23	HB

WINSLOW
OLD BRICKYARD FARM

SITE LAYOUT

DATE: **18/07/2022**
SCALE: **1:500@A0**
DRAWN: **OC**
CHECKED: **OC**

BLOOR HOMES®
BLOOR HOMES SOUTH MIDLANDS
BEWICK HOUSE, 6 CYGNET DRIVE
SWAN VALLEY, NORTHAMPTON, NN4 9BS
TELEPHONE 01604 684400 FACSIMILE 01604 684401

Drawing No. SM5145-SL-001 Rev. Y

Appendix 1021/LEMP3:

Emorsgate – General Purpose Meadow Mixture (EM1)

EM1 – BASIC GENERAL PURPOSE MEADOW MIXTURE

Composition

This is a simple meadow mixture suitable for a wide range of soil types. The wildflowers are robust and showy, and the grasses are fine and slow growing.

Wild Flowers

%	Latin name	Common name
	Centurea nigra	Common Knapweed
	Daucus carota	Wild Carrot
	Leucanthemum vulgare	Oxeye Daisy - (Moon Daisy)
	Plantago lanceolata	Ribwort Plantain
	Ranunculus acris	Meadow Buttercup
	Vicia cracca	Tufted Vetch
10		

Grasses

%	Latin name	Common name
9	Agrostis capillaris	Common Bent
36	Cynosurus cristatus	Crested Dogstail
27	Festuca rubra	Red Fescue
18	Poa pratensis	Smooth-stalked Meadow-grass
90		

Sowing Rates

kg/ha	kg/acre	g/m²
40	16	4

Appendix 1021/LEMP4:

Emorsgate – Pond Edge Mix (EP1)

EP1 – POND EDGE MIXTURE

Composition

Pond edge mixture EP1 contains wild flowers and grasses suitable for sowing at the wet margins of ponds, streams and ditches.

Wild Flowers

%	Latin name	Common name
	Achillea millefolium – Yarrow	Yarrow
	Agrimonia eupatoria	Agrimony
	Angelica sylvestris	Wild Angelica
	Centaurea nigra	Common Knapweed
	Chaerophyllum temulum	Rough Chervil
	Cruciata laevipes	Crosswort
	Dipsacus fullonum	Wild Teasel
	Filipendula ulmaria	Meadowsweet
	Galium album – (Galium mollugo)	Hedge Bedstraw
	Galium verum	Lady's Bedstraw
	Leucanthemum vulgare	Oxeye Daisy – (Moon Daisy)
	Lythrum salicaria	Purple Loosestrife
	Malva moschata	Musk Mallow
	Plantago lanceolata	Ribwort Plantain
	Rumex acetosa	Common Sorrel
	Silaum silaus	Pepper Saxifrage
20		

Grasses

%	Latin name	Common name
10	Agrostis capillaris	Common Bent
3	Anthoxanthum odoratum	Sweet Vernal-grass
6	Briza media	Quaking Grass
26	Cynosurus cristatus	Crested Dogstail
2	Deschampsia cespitosa	Tufted Hair-grass
28	Festuca rubra	Red Fescue
5	Schedonorus pratensis (Festuca pratensis)	Meadow Fescue
80		

Sowing Rates

kg/ha	kg/acre	g/m²
40	16	4

Appendix 1021/LEMP5:

Bat Box Specifications

Bat Boxes

The Beaumaris Bat Box

This bat box is made entirely from Woodstone, a robust material comprising concrete and wood fibres. This means that, not only does the box have excellent insulating properties maintaining a more consistent temperature throughout the year, it also provides excellent protection from predators. The Beaumaris box has a single narrow cavity which makes it suitable for crevice roosting bats such as the common pipistrelle, soprano pipistrelle, Nathusius' pipistrelle, Brandt's bat and whiskered bat. The interior of the box has a rough surface for bats to cling to and the front of the box features a subtle but attractive imprint of a bat in flight.

Suitable for attaching to external walls and should be sited as high up on the façade as possible, at a height of at least 3m from the ground. Avoid siting underb artificial lights. Bats prefer to change roosts to benefit from varying ambient temperatures, so bat boxes should ideally be clustered in small groups.

Available in two sizes: the Midi and the Maxi.

Specification
Midi: Height: 39cm, Width: 29cm, Depth: 6cm, Weight: 4.4kg

Maxi: Height: 50cm, Width: 38cm, Depth: 7cm, Weight: 8kg

General Purpose Wood Concrete Bat Box

About this product

The General Purpose Wood Concrete Bat Box is a tree mounted bat box designed to suit crevice and cavity dwelling bat species in the UK. It is constructed from wood concrete which is a mix of wood fibres and concrete which makes the box very durable and long-lasting. This material is also breathable reducing the risk of condensation issues within the box and offering a more thermally stable climate for rossting bats. It features two entrances, one on the bottom of the box which allows bats to crawl into the box from a tree, and one on the front which offers a clear flight path for bats. The entrance hole on the base of the box also allows the box to be self cleaning, reducing the maintenance required. The internal chamber is divided into two chambers, which can help with excluding small predators, and it features a domed roof to allow bats to form roosting clusters for warmth.

The box is supplied with a galvanised steel hanger to aid with mounting the box onto a tree.

Specification

Outer Dimensions: 36cm height x 18cm diameter
Inner Dimensions: 31cm height x 11cm diameter
Weight: 4.5kg
Material: Wood concrete
Colour: Black
Supplied with: Galvanised steel hanger

Appendix 1021/LEMP6:

Bird Box Specifications

Manthorpe Swift Box

The design of this box enables it to be incorporated within the brickwork whilst the visible part of the nest box takes the space of a single brick. The entrance hole should be positioned at least 5m above the ground and sited to ensure unobstructed access for birds entering or leaving the box. Available in a range of colours to match the surrounding masonry.

Dimensions: 153mm (h) x 347mm (w) x 200mm(d). Weight 0.71kg

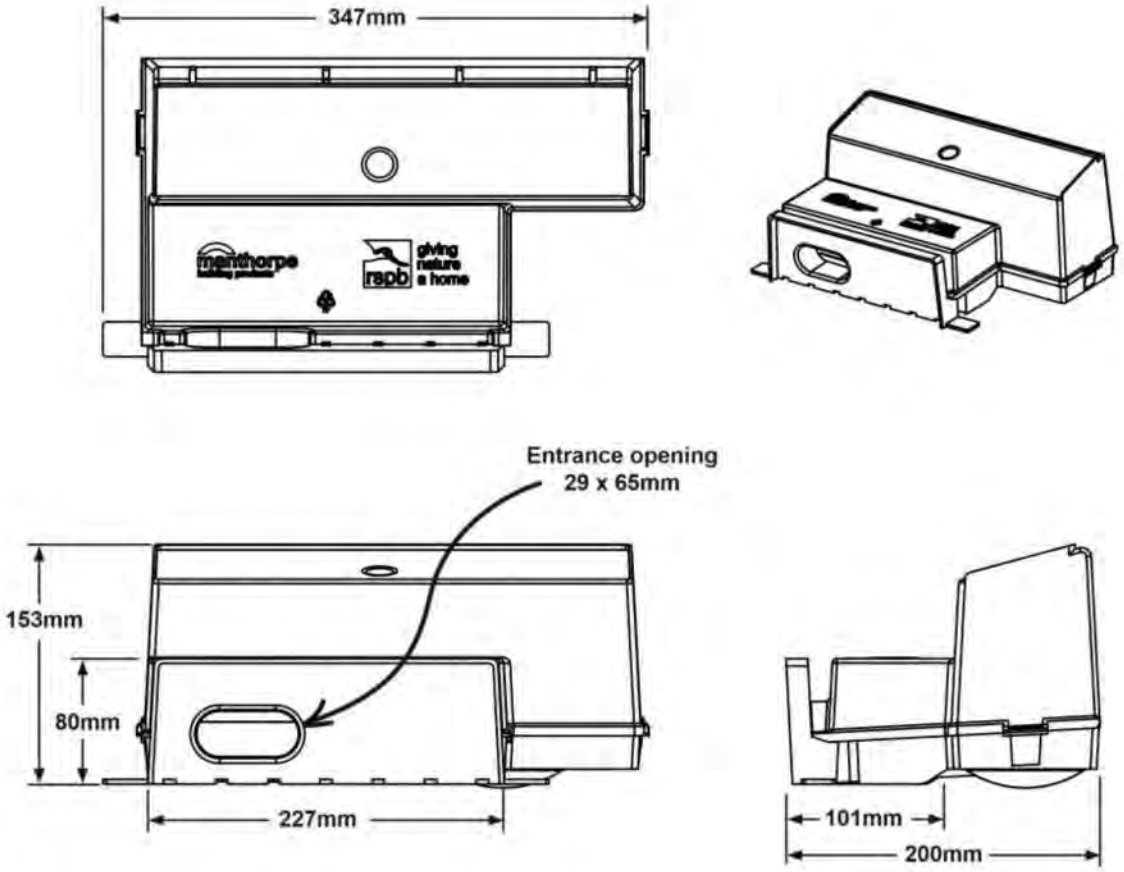

Aspect Ecology Ltd, West Court, Hardwick Business Park, Noral Way, Banbury, Oxfordshire, OX16 2AF. Licence No. 100045262

Bird Boxes

Habibat Terraced Sparrow Nest Box

A terraced bird box with three chambers designed specifically for Sparrows which can be integrated into a building.

Dimensions: 215H x 440L x 150D mm.
Weight 2.8kg

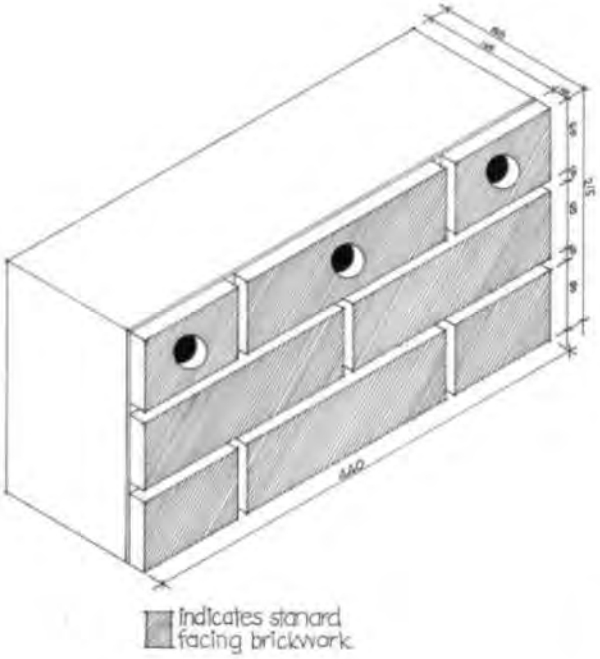

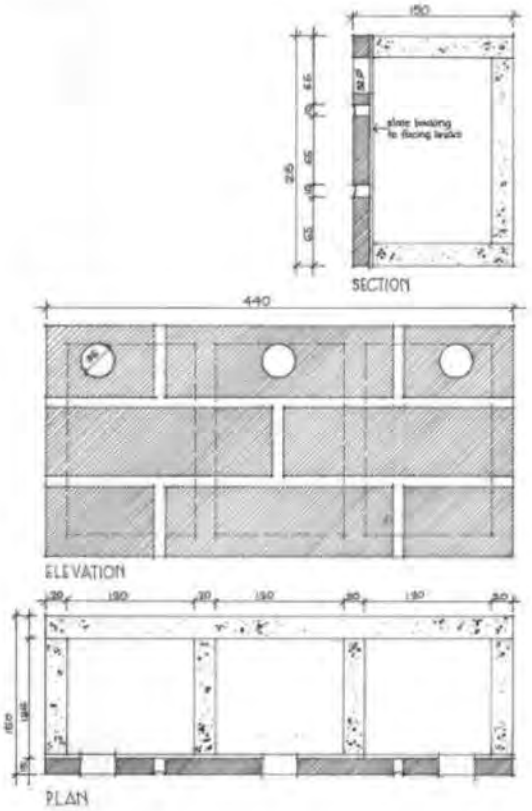

Appendix 1021/LEMP7:

Hedgehog Dome and Cut-out Specifications

Hedgehog Dome

Hedgehog Dome

Schwegler Hedgehog Domes are made from 'Woodcrete'. This 75% wood sawdust, clay and concrete mixture which is breathable and very durable makes this dome extremely long lasting and durable.

Hedgehogs usually construct nesting places in hollow tree stumps, piles of wood, dense vegetation and piles of leaves, all of which are becoming more and more scarce within the Hedgehogs natural range. The Schwegler Hedgehog Dome will provide ideal year round and hibernation accommodation for this species, which is listed as a UK BAP priority species, especially when filled with suitable bedding material such as dry leaves, newspaper or wood shavings.

Placement: Ideally the dome should be placed somewhere protected from wind and rain.

Specification: Interior circumference 44cm height, Exterior circumference 50cm, 28cm height. Entrance 11x12 cm, Weight 17kg

Hedgehog Dome

Hedgehog Dome - Occupied

Hedgehog cut-outs

Cut outs will be located at the base of garden fences to enable Hedgehogs to move freely between gardens. Gaps will be a minimum of 15cm high and 15cm wide.

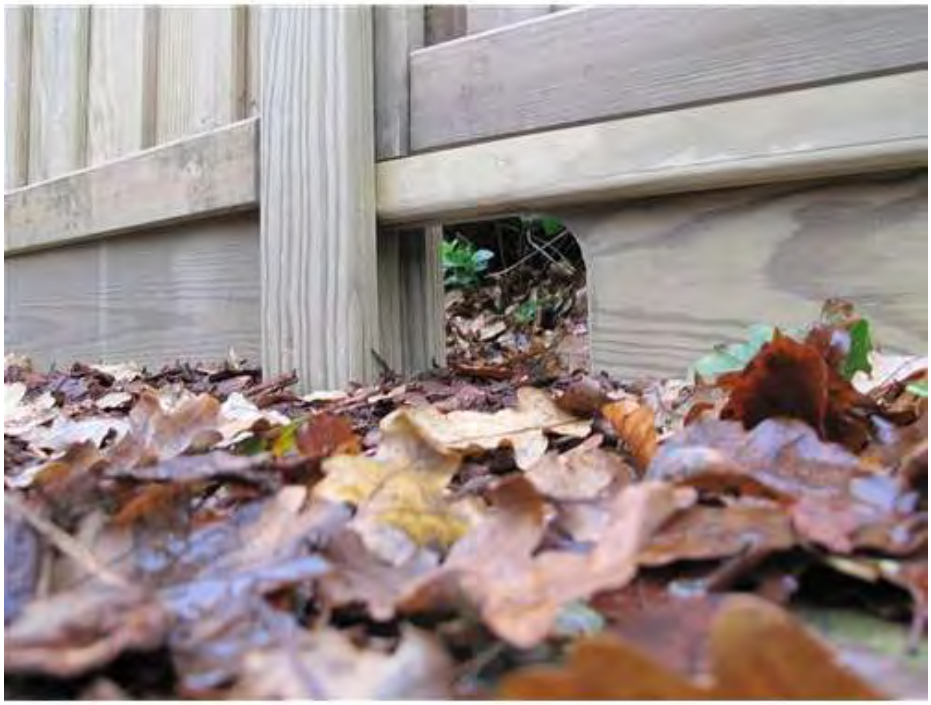

Alternatively, specifically designed gravel boards are available from a variety of suppliers.

Aspect Ecology Ltd, West Court, Hardwick Business Park, Noral Way, Banbury, Oxfordshire, OX16 2AF. Licence No. 100045262

Appendix 1021/LEMP8:

Hibernacula / Log Pile Specifications

Hibernacula and Log Pile

Hibernaculum

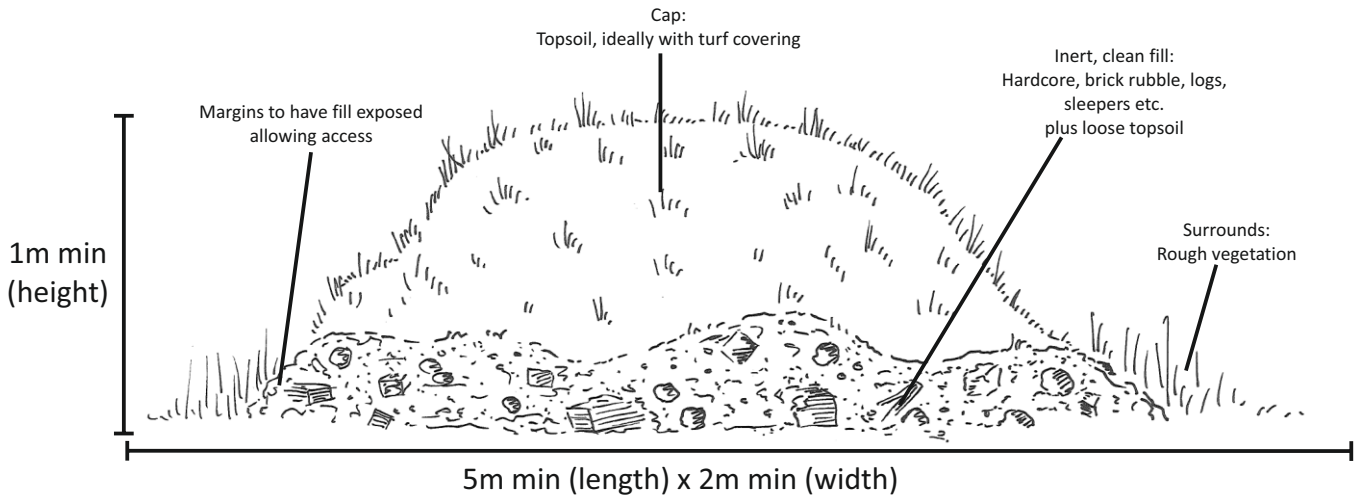

The design mimics artificial and natural conditions in which amphibians and reptiles have frequently been found over-wintering. Dimensions should not be below 5m length x 2m width x 1m height. The above illustrated design would be suitable for locating on an impermeable substrate. On free-draining substrates, the design is largely similar but the bulk of the fill is sited in an excavated depression in the ground. Hibernacula should ideally be positioned in suitable terrestrial habitat for newts and outside the normal winter extent of the breeding pond.

Log Pile (refugia)

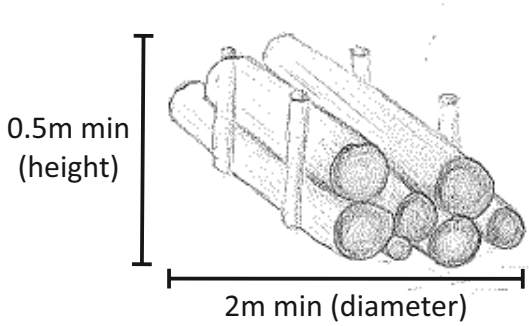

Refugia are designed to provide sheltering opportunities for amphibians and reptiles. Dimensions should not be below 2m in diameter x 0.5m height. Refugia can be created from wood or brash piles, and should ideally be positioned across a site, both close to and distant from breeding ponds, in suitable terrestrial habitat.

The wood pile illustrated above is created by sinking 4 posts approximately 8-10cm in diameter, at least 20cm into the ground. Logs with bark, of any diameter, should be cut into consistent lengths of 2m and then tightly and nearly stacked into the space between the uprights. The log piles should not be made too high, or the timber may dry out.

Appendix 1021/LEMP9:

Invertebrate Boxes

Insect Boxes

Bug Box

A dual insect habitat which can be hung from trees or man made structures near ponds or scented plants, to provide an overwintering habitat for ladybirds and a nesting site for solitary bees.

Dimensions: 14 x 20 x 9cm

Wooden Insect House

A good general insect habitat for beneficial insects in summer and, later in the year, overwintering ladybirds and lacewings. Site in a sheltered place near pollen / nectar plants or by pond.

Durable and strong construction in Acacia / Oak / Larch with no maintenance necessary.

Dimensions: 22 x 13.5 x 13.5cm

Appendix 1021/LEMP10:

Partially Buried Log Piles

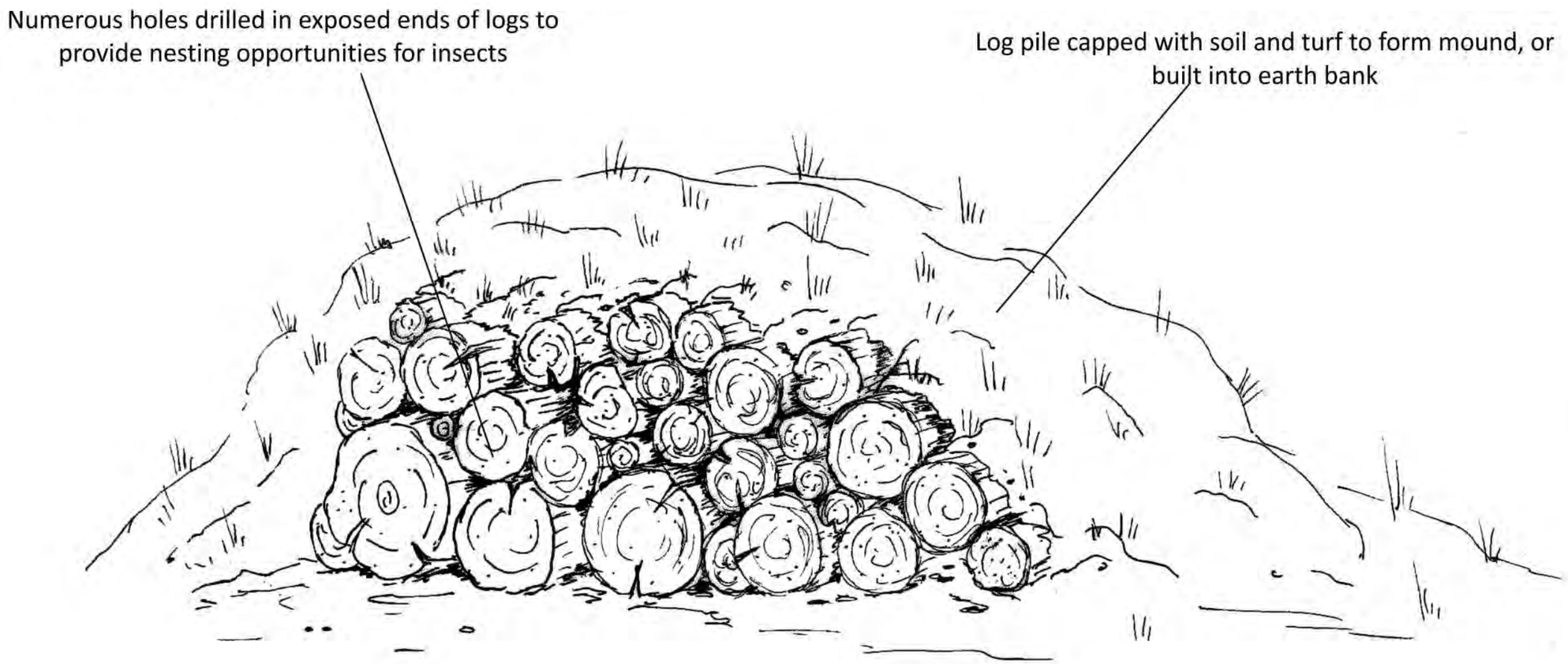

Partially buried log piles will be created to provide additional invertebrate habitat. These will be positioned within banks or to form mounds, with numerous holes drilled in the exposed ends of the logs, providing opportunities for invertebrate species such as solitary bees and wasps. The log piles will also form habitat for saproxylic insects (associated with dead wood) and a refuge for small mammal, amphibian and reptile species.

Materials used for construction of the hibernacula will be obtained from site where possible, including logs from vegetation clearance.

ecology • landscape planning • arboriculture

aspect

Aspect Ecology Ltd
West Court
Hardwick Business Park
Noral Way
Banbury
Oxfordshire OX16 2AF

T: 01295 279721
E: info@aspect-ecology.com
W: www.aspect-ecology.com