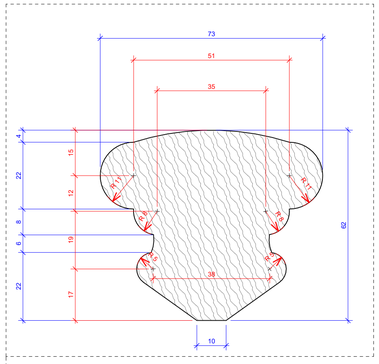

3 Handrail Profile
1 : 1

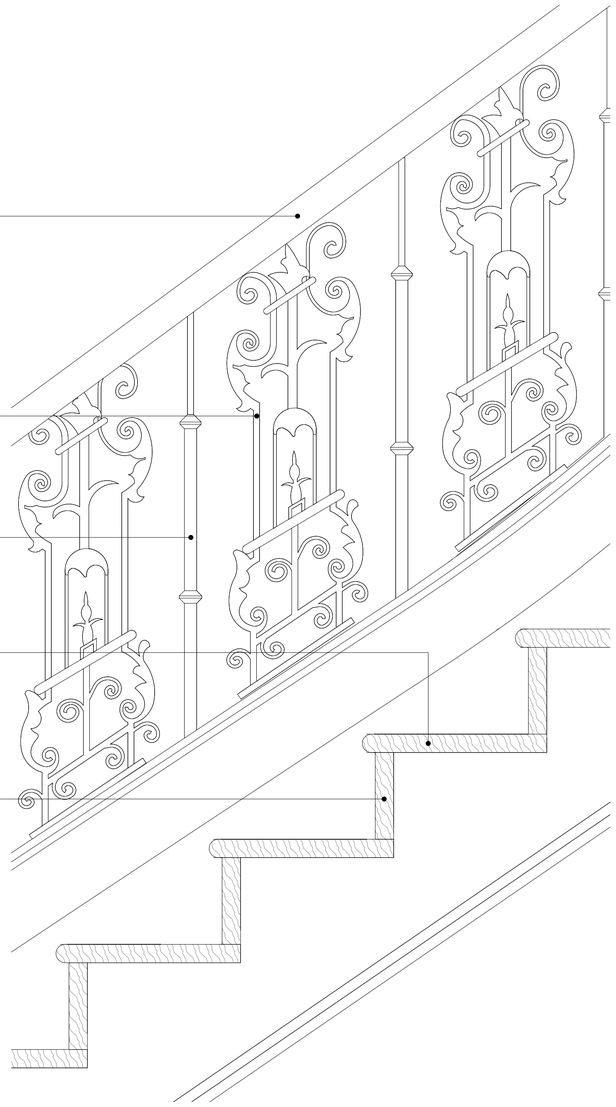

1 Secondary Stair Detail 1
CST-STA-DD-ZZ-DR-A-ST5002
1 : 5

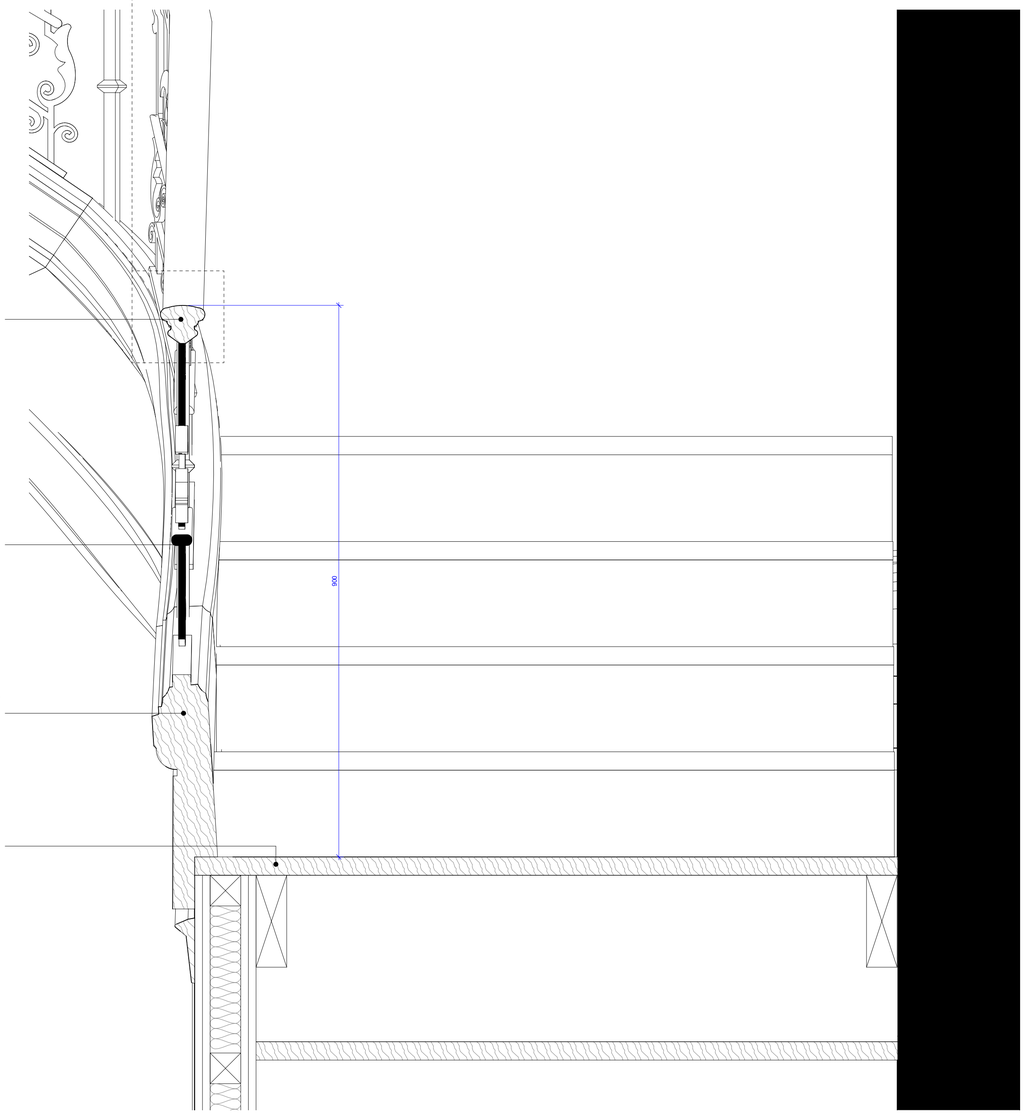

2 Secondary Stair Detail 2
1 : 5

0 0.25 0.5 m

DO NOT SCALE: Use figured dimensions only. All dimesnions are to be checked on site. Any queries or discrepancies must be reported immediately to the architect.

This drawing is to be read in conjunction with drawings and specifications prepared by the architects and any other information prepared by others for the stated project.

All illustrated material is subject to copyright unless otherwise agreed in writing. This document must be read for the express purpose and project for which it has been created and delivered and must be read with relevent specification clauses.

FOR INFORMATION

Revisions			
Rev.	Date	Drawn by.	Description

STANESBY
ARCHITECTURE
info@stanesbyarchitecture.co.uk
www.Stanesbyarchitecture.co.uk
m: 07917 246 805

Project title
16 Charles Street

Drawing title
Secondary Stair Details
Sheet 7

Date	Drawn by	Checked
01/12/2023	MB	AE
Scale: As indicated @A1		Rev.

Drawing number: CST-STA-DD-ZZ-DR-A-ST5007