PLANT AREA (1:20)

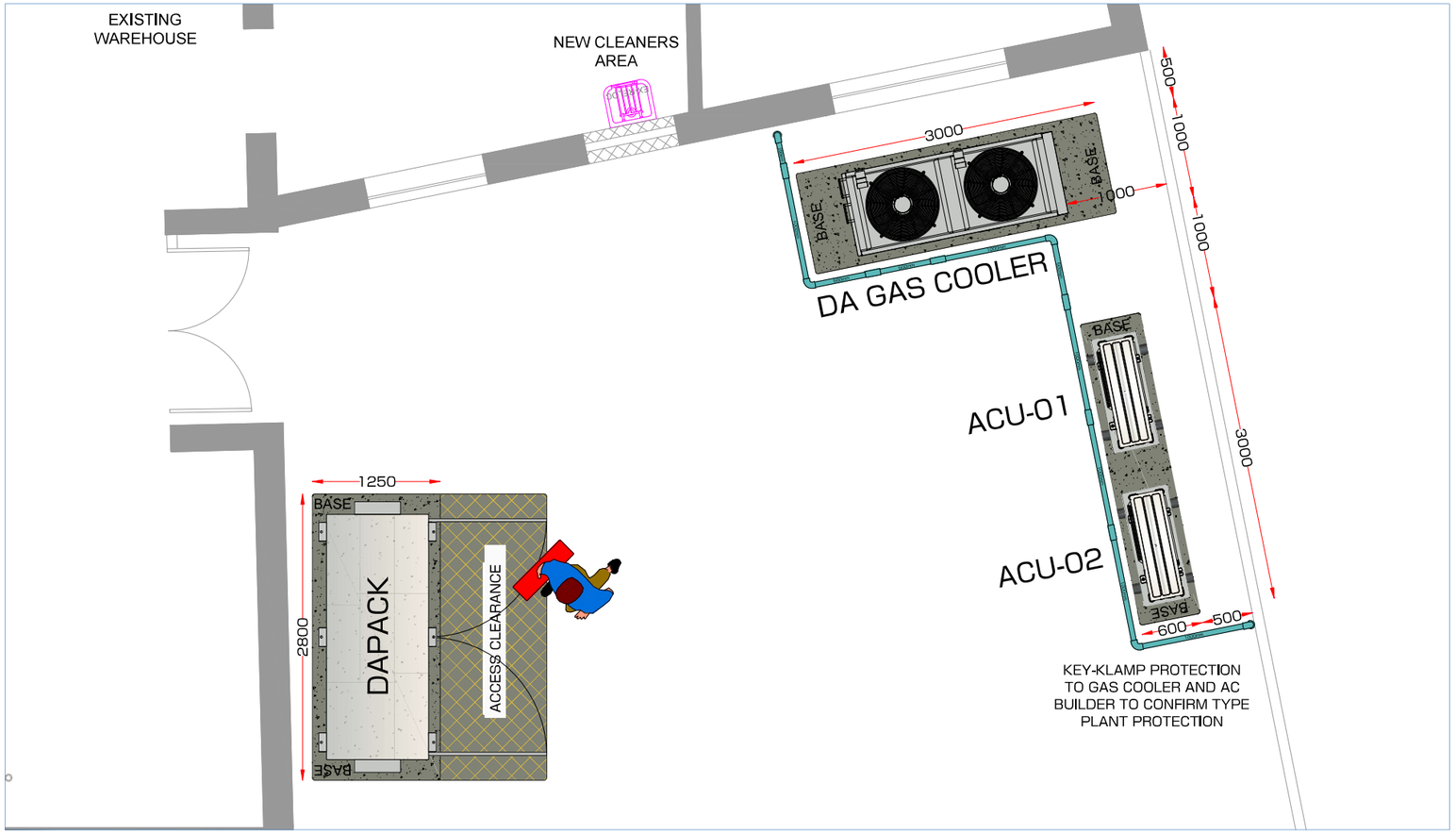

DAPACK (1:20) (NEW)

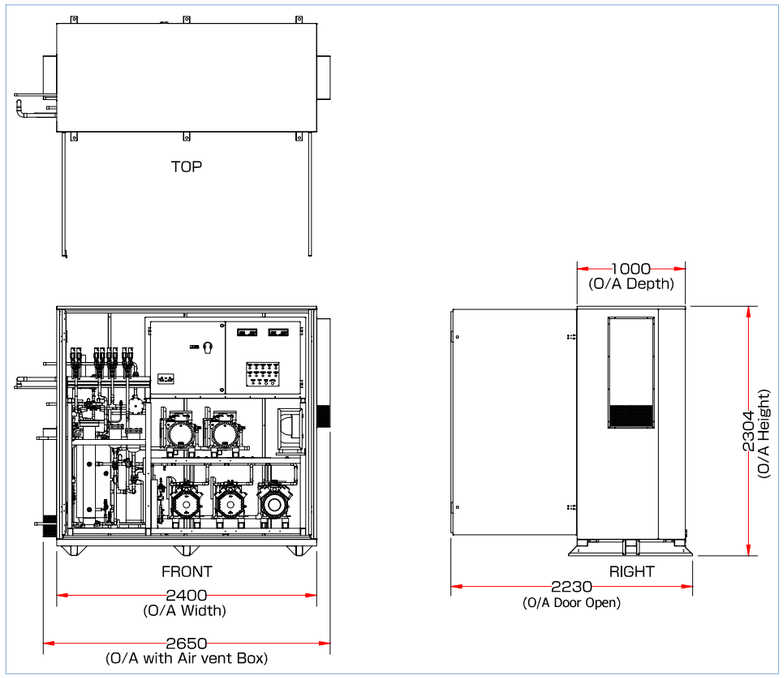

DA GAS COOLER (1:20) (NEW)

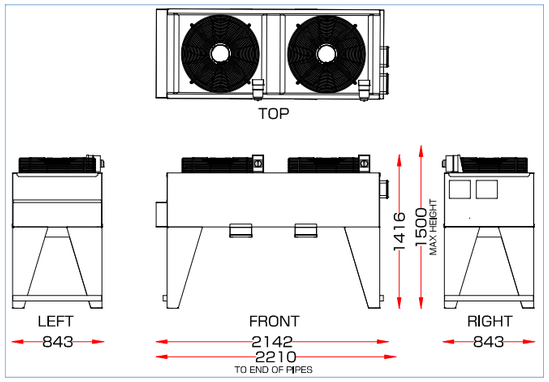

ACU-01 & ACU-02 (NEW) (1:20)

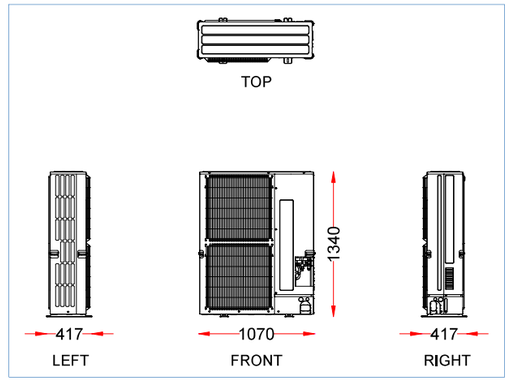

REFRIGERATION ENGINEERING SCHEDULE - PLANT

System Name: DA System

Compressor Pack Details — DAPACK

Transcritical Performance at 38 ° C GCLT & 93.7 bar(a) DP

New / Existing	Manufacturer	Model	Pack Controller	Compressor Temp Range	Compressor Model	Design Frequency (Hz)	Max Frequency (Hz)	Min Frequency (Hz)	Design Evap Capacity (kW)	Max Evap Capacity (kW)	Min Evap Capacity (kW)	Design Load inc. Safety (kW)	Utilisation of Design Capacity	Utilisation of Max Capacity	Min Capacity % of Design Load	Design Heat Rejection (kW)	Max Heat Rejection (kW)	Min Heat Rejection (kW)	Design Power Input (kW)	Max Power Input (kW)	Min Power Input (kW)
					2KTE-7K (VSD)	58	70	30	8,430	9,010	3,590					19,820	24,500	9,700	6,990	8,540	3,660
New	Hubbard	2B/2M	RDM PR0652	HT	2MTE-5K	50	50	OFF	4,910	4,240	0,000	13,336	99,970%	100,649%	26,920%	11,550	11,530	0,000	4,110	4,110	0,000
					HT Total				13,340	13,250	3,590					31,370	36,030	9,700	11,100	12,650	3,660
					2MME-1K (VSD)	31	70	30	1,770	4,230	1,700								0,470	1,070	0,460
				LT	2MME-1K	50	50	OFF	2,990	2,990	0,000	4,739	99,551%	65,632%	35,875%				0,720	0,720	0,000
					LT Total				4,760	7,220	1,700								1,190	1,780	0,460
					Pack Totals				18,100	20,470	5,290	18,075				31,370	36,030	9,700	12,290	14,440	4,120

COP At Design Ambient	Design Capacity	1,473	HT Duty Safety	5%	
	Max Capacity	1,418			
	Min Capacity	1,284	LT Duty Safety	5%	
Vessel Volume (dm ³)		40			
Pressure Equipment Category		III			

Physical

Weight (kg)	Length of Unit (mm)	Width of Unit (mm)	Height of Unit (mm)	Sound dB(A) @ 10m DAY	Sound dB(A) @ 10m NIGHT
Approx. 2000	2650	1049	2304	30	30

Electrical

Design Run Current (A)	Full Load Current (A)	Power Supply
40	60	400v 3P & N

Notes:
Housed pack & remote gas cooler.

Gas Cooler Details — DA GAS COOLER

General Details

New / Existing	Manufacturer	Model	Capacity (kW)	Fan Control Type	Orientation	Number of Fans	Fin Coating	Weight (kg)	Length of Unit (mm)	Width of Unit (mm)	Physical Height of Unit (mm)	Sound dB(A) @ 10m DAY	Sound dB(A) @ 10m NIGHT	Internal Volume (dm ³)	Day Time (rpm)/(volt)	Night Time (rpm)/(volt)	Electrical Start Current Per Fan (A)	FLC Per Fan (A)	Power Supply
New	Coolers & Condensers	GFHA1-123AMg-E063H3	37.8	EC	Horizontal	2	Standard	251	2210	843	1500	30	30	8.3	575/3.99	575/3.99	-	1.6	400v 3P & N

Heat Pump Details For Zone: Sales Area

Outdoor Unit Models

AC I.D.	New / Existing	Model	Manufacturer	Number of Connected Indoor Units	Refrigerant	Furthest Pipe Length (m)	Refrigerant Charge (inc. Additional) (kg)	Nominal Heating Power Input (kW)
ACU-01	New	PUZ-ZM140YKA2	Mitsubishi Electric	1	R32	30	3,600	4,312
ACU-02	New	PUZ-ZM140YKA2	Mitsubishi Electric	1	R32	44	4,000	4,312
	Totals	2					7,600	8,624

Indoor Unit Models

AC I.D.	New / Existing	Model	Connected Outdoor Unit I.D.	Emitter Type	Nominal Heating Capacity (kW)	Actual Heating Capacity @ Design WBT (kW)	Zone Heating Load Inc. Safety (kW)	Utilisation at Design Conditions Heating
AC1-01	New	PLA-ZM140EA2	ACU-01	Ceiling Cassette	15,930	10,990		
AC1-02	New	PLA-ZM140EA2	ACU-02	Ceiling Cassette	15,930	10,890		
	Totals	2			31,860	21,880	21,641	98.91%

Plant Details (Outdoor Units)

	Weight (kg)	Width of Unit (mm)	Depth of Unit (mm)	Height of Unit (mm)	Sound dB(A) @ 1m	Starting Current (A)	Full Load Current (A)	Fuse Rating (A)	Power Supply
ACU-01	118	1050	370	1338	52	3.3	13.7	16	400v 3P & N
ACU-02	118	1050	370	1338	52	3.3	13.7	16	400v 3P & N

PROJECT DETAILS & DESIGN CONDITIONS

Project Details

Store Name:	Fulbourn
Project Name:	2024 Food Refit
Address:	11 High Street Cambridge Cambridgeshire CB21 5DH
Client:	The Cooperative Group
Project Number:	2581
Client Drawing Number:	P5-F14-M0
Engineer:	Gary Bellbond
Date:	08/04/2024
Revision:	-

Refrigeration Design Conditions

System Name:	DA System
Refrigerant	R744
System Configuration	DX TC FG-BP

Low Side	HT	LT	
Maximum Allowable Pressure	60	60	bar(g)
Evaporating Temperature	-3	-28	° C
Suction Penalty	1	1	K
Saturated Suction Temperature	-4	-29	° C
Evaporator Superheat	4	6	K
Suction Line Superheat	8	14	K
Additional Superheat	0	9	K
Total Superheat at Compressor Inlet	12	29	K
Suction Gas Return Temperature	8	0	° C
High Side			
Maximum Allowable Pressure		120	bar(g)
Supercritical Operation			
Maximum Ambient Temperature		35	° C
Gas Cooler TD		3	K
Gas Cooler Outlet Temperature		38	° C
Return Line HX Cooling		0	K
Cooled Gas Temperature		38	° C
Discharge Design Pressure t(GCOT) Profile	Bitzer	93,7	bar(a)
Subcritical Operation			
Ambient Temperature		22	° C
Condenser TD		8	K
Condensing Temperature		30	° C
Minimum Condensing Temperature		13	° C
Intermediate Side			
Maximum Allowable Pressure		60	bar(g)
Intermediate Operating Pressure		38	bar(a)
Equivalent Vessel Temperature		3,3	° C
Liquid HX Subcooling		0,8	K
Liquid Temperature		2,5	° C
Maximum Liquid Temp (Pipework Design)		5	° C
Minimum Liquid Temp (Pipework Design)		-2	° C

Notes:

The plant consists of a Hubbard housed pack and Kelvion gas cooler.

DWG Units: mm

SCALE BAR 1:20

0 500 1000 2000 3000 4000

PLOT IN COLOUR

LEGEND (NTS)

SERVICE ROUTE - PIPEWORK - CONTAINED
SERVICE ROUTE - AIR CONDITIONING
SERVICE ROUTE - ELECTRICAL
SERVICE ROUTE - DRAINAGE (NO DETAIL)
CONDENSATE DRAINAGE HOSE
CONDENSATE DRAINAGE PIPEWORK 50mm ABS SWEPT BENDS (INSULATED) LAYOUT
CONDENSATE DRAINAGE PIPEWORK 21.3mm LAYOUT
REFRIGERANT PIPEWORK (INSULATED) RHEOTHERM LAYOUT
SERVICES RISE / FALL
DRAINAGE TYPE (S) PUMPED
DRAIN UPSTAND
DRAINAGE TYPE (S) GRAVITY
POM CHARGING STATION
REFRIGERANT LEAK DETECTION REQUIRED
TOP / UNDERSIDE NEW FASCIA — AC CASSETTE UNIT (MITSUBISHI)
TOP / UNDERSIDE VERTICAL FASCIA — AC CASSETTE UNIT (DAIKIN)
AC WALL MOUNTED UNIT (DAIKIN)
MITSUBISHI EFFIZENT CO-140 AC SPLIT EXTERNAL UNIT
MITSUBISHI EFFIZENT CO-140 AC SPLIT EXTERNAL UNIT WITH FAN OUTLET GUARD
DAIKIN REASONSATICO AC SPLIT EXTERNAL UNIT
ASPEN KOFA METAL HANGER MOUNTED AC SPLIT EXTERNAL CONDENSATE TRAY
FABRICATED METAL FLOOR MOUNTED AC SPLIT EXTERNAL CONDENSATE TRAY
ACC — AIR CONDITIONING CONTROLLER
DSF — DISTRIBUTION FAN
DFC — DISTRIBUTION FAN SPEED CONTROLLER
CDS — DISPLAY CASE CONDENSATE PUMP
CTP — CONDENSATE TANK PUMP LETTUS (WINY WOMAN) (OR SIMILAR)
DMT — POM DATA MANAGER TOUCH
RIS — POM INTERFACE SWITCH
CCP — POM COLDROOM CONTROL PANEL
PEA — PERSONNEL ENTRAPMENT ALARM WITH GUARD
ISC — COLDROOM INSULATED STRIP CURTAIN COLDSTOP THERMAL (OR SIMILAR)
CLF — COLDROOM LIGHT FITTING PLANET SAVER LED 20 (OR EQUIVALENT)
RDB — REFRIGERATION DISTRIBUTION BOARD
SFS — SWITCHED FUSED SPUR
SSS — SWITCHED SINGLE SOCKET (WEMAX / PLUG-IN TYPE)
LDI — OPC REFRIGERANT LEAK DETECTION INTERFACE MODULE
HA01-1 — SYSTEM I.D. NUMBER

Rev	By	Date	Details
-	-	-	-

Project: FULBOURN

Store ID: 4959

Client: co op

Healy's
Unit 5, Epsom Downs Metro Centre
Waterfield, Tadworth
Surrey
KT2 5LR
Tel:01737 371 101
email:office@healyacr.co.uk
www.healyacr.co.uk

Drawing Title: PLANT LAYOUT

Client Drawing Revision: P5-F14-M0

Design Engineer: Gary Bellbond
Drawn By: GJSBB
Drawn: 11/04/2024
Scale: 1:20 PLOTTED ON ISO A0
Drawing No: 2581-3
Revision: -